KENWOOD

# SERVICE MANUAL

## Model TS-820(S)


SSB TRANSCEIVER

# CONTENTS

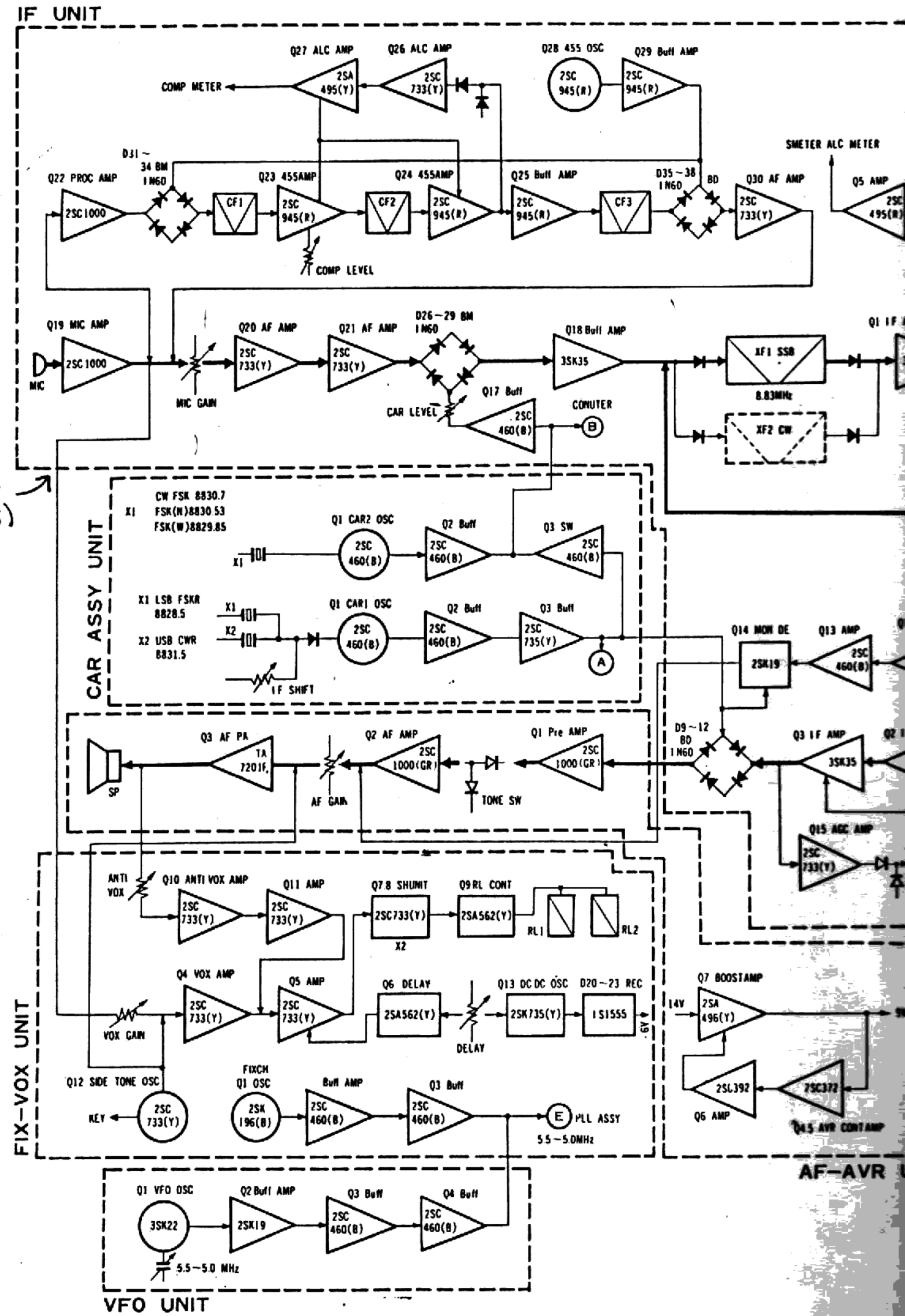
IF UNIT
Q27 ALC AMP
Q26 ALC AMP
Q28 455 OSC
Q29 Buff AMP
COMP METER
2SA 495(Y)
2SC 733(Y)
2SC 945(R)
SMETER ALC METER
Q22 PROC AMP
D31 ~ 34 BM 1N60
Q23 455AMP
Q24 455AMP
Q25 Buff AMP
D35 ~ 38 1N60
BD
Q30 AF AMP
Q5 AMP
2SC1000
CF1
CF2
CF3
COMP LEVEL
Q19 MIC AMP
MIC
MIC GAIN
Q20 AF AMP
Q21 AF AMP
D26 ~ 29 BM 1N60
Q18 Buff AMP
3SK35
XF1 SSB
8.83MHz
XF2 CW
Q17 Buff
CAR LEVEL
CONUTER
2SC 460(B)
MON (IF4-5)
CAR ASSY UNIT
CW FSK 8830.7
X1 FSK(N)8830.53
FSK(W)8829.85
Q1 CAR2 OSC
Q2 Buff
Q3 SW
X1 LSB FSKR 8828.5
X2 USB CWR 8831.5
Q1 CAR1 OSC
Q3 Buff
IF SHIFT
Q14 MON DE
Q13 AMP
2SK19
D9 ~ 12 BD 1N60
Q3 IF AMP
Q3 AF PA
TA 7201F
Q2 AF AMP
Q1 Pre AMP
SP
AF GAIN
TONE SW
Q15 AGC AMP
FIX-VOX UNIT
ANTI VOX
Q10 ANTI VOX AMP
Q11 AMP
Q7.8 SHUNIT
Q9 RL CONT
2SC733(Y)
2SA562(Y)
RL1
RL2
Q4 VOX AMP
Q5 AMP
Q6 DELAY
Q13 DC DC OSC
D20 ~ 23 REC
Q7 BOOSTAMP
14V
2SA 496(Y)
VOX GAIN
DELAY
1S1555
Q12 SIDE TONE OSC
KEY
FIXCH Q1 OSC
2SK 196(B)
Buff AMP
Q3 Buff
PLL ASSY
5.5 ~ 5.0MHz
2SC392
2SC372
Q6 AMP
Q4.5 AVR CONTAMP
AF-AVR
Q1 VFO OSC
Q2 Buff AMP
Q3 Buff
Q4 Buff
3SK22
5.5 ~ 5.0 MHz
VFO UNIT

# TS-820S BLOCK DIAGRAM

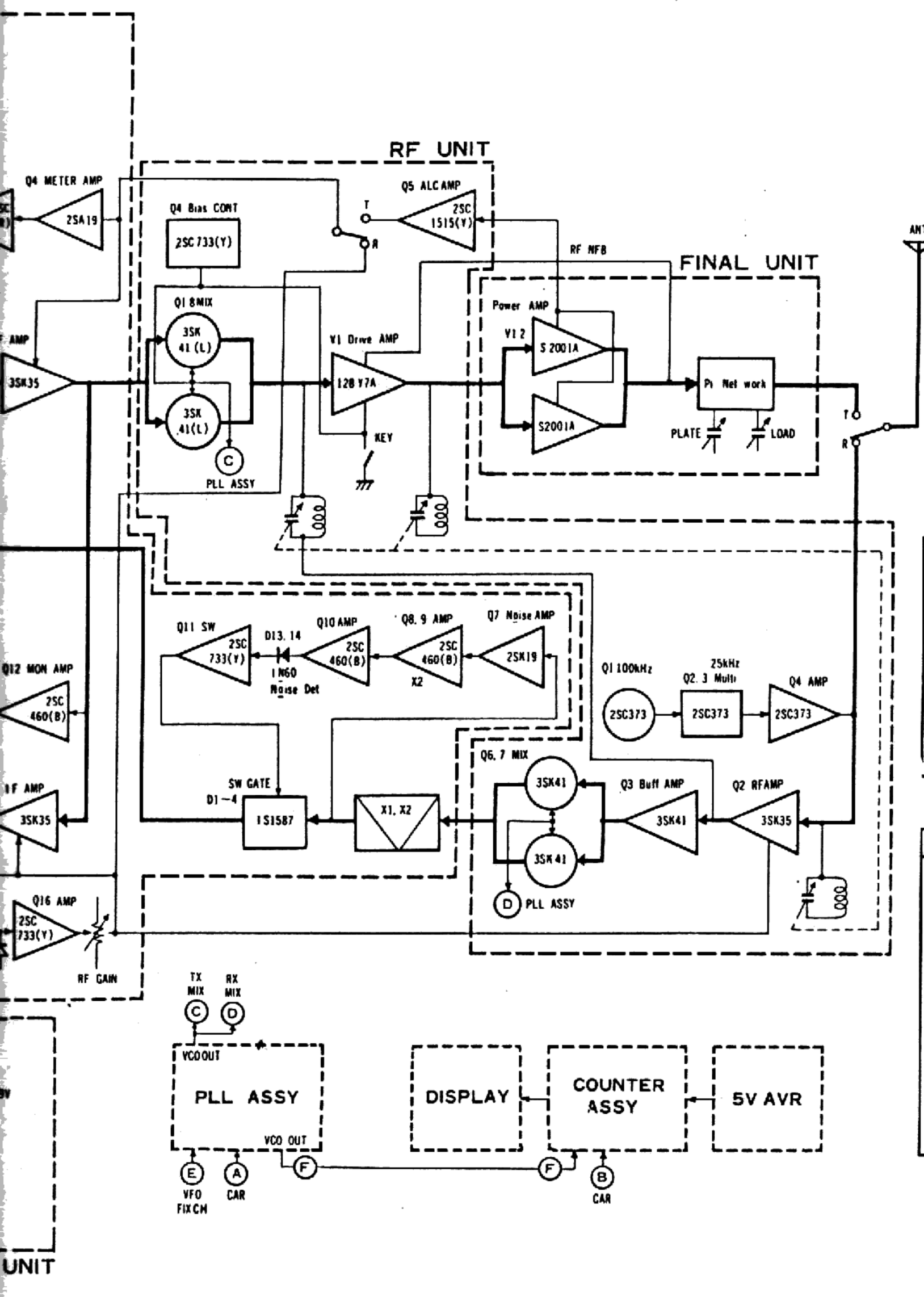


CAR FREQ

| MODE | FREQ | OSC |
|---|---|---|
| LSB | 8828.5 | CAR1 |
| USB | 8831.5 | CAR1 |
| CW(T) | 8830.7 | CAR2 |
| CW(R) | 8831.5 | CAR1 |
| FSK(S) | 8830.7 | CAR2 |
| FSK(MN) | 8830.53 | CAR2 |
| FSK(MW) | 8829.85 | CAR2 |
| FSK(R) | 8828.5 | CAR1 |

HET RFEQ(VCO)

| BAND | FREQ |
|---|---|
| JJY wwV | 23.83~24.33 |
| 1.8 | 10.63~11.13 |
| 3.5 | 12.33~12.83 |
| 7 | 15.83~16.33 |
| 14 | 22.83~23.33 |
| 21 | 29.83~30.33 |
| 28 | 36.83~37.33 |
| 28.5 | 37.33~37.83 |
| 29 | 37.83~38.33 |
| 29.5 | 38.33~38.83 |
| AUX | |

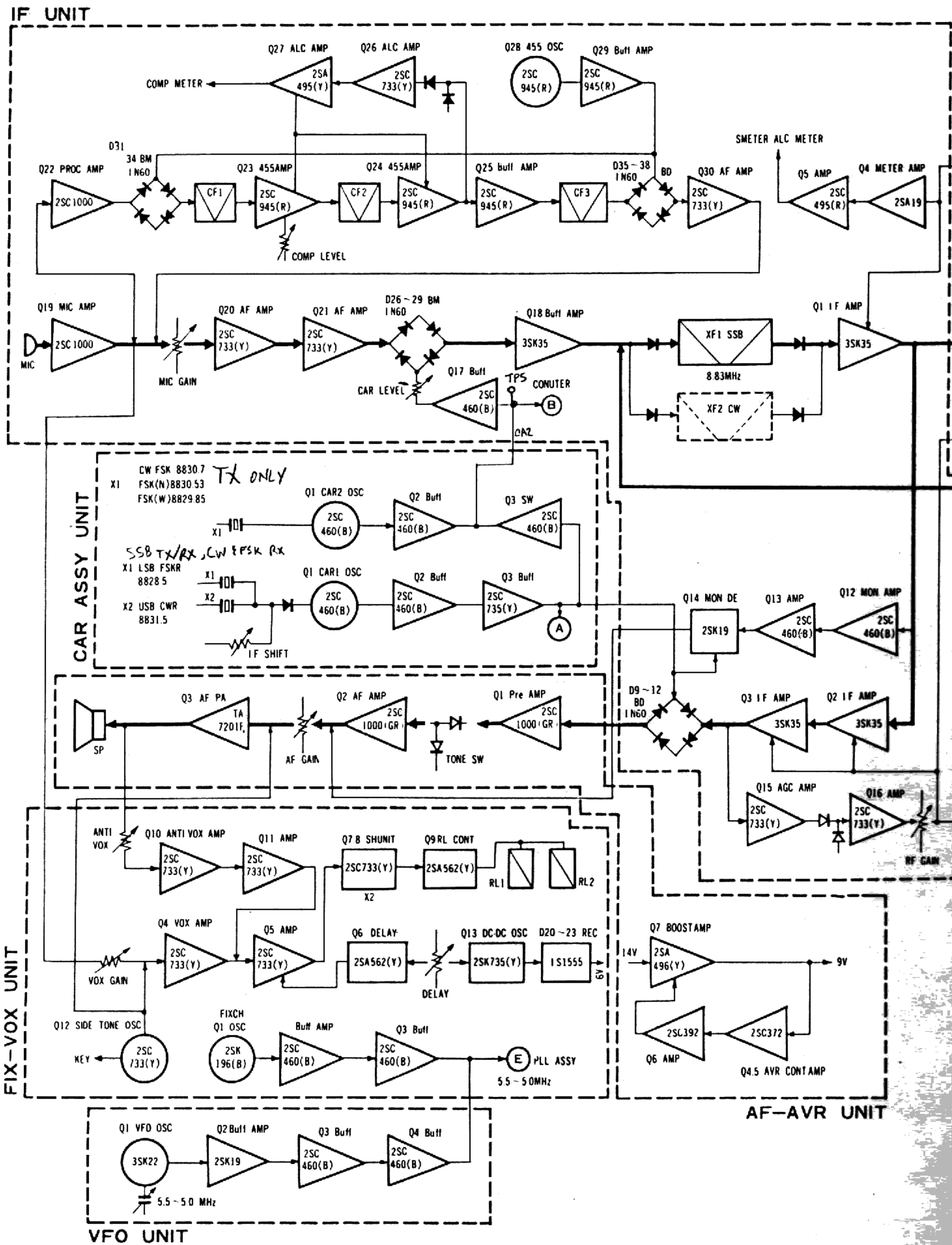
IF UNIT
Q27 ALC AMP
Q26 ALC AMP
Q28 455 OSC
Q29 Buff AMP
COMP METER
2SA 495(Y)
2SC 733(Y)
2SC 945(R)
2SC 945(R)
SMETER ALC METER
D31 34 BM 1N60
Q22 PROC AMP
Q23 455AMP
Q24 455AMP
Q25 buff AMP
D35~38 1N60
BD
Q30 AF AMP
Q5 AMP
Q4 METER AMP
2SC1000
CF1
2SC 945(R)
CF2
2SC 945(R)
2SC 945(R)
CF3
2SC 733(Y)
2SC 495(R)
2SA19
COMP LEVEL
Q19 MIC AMP
Q20 AF AMP
Q21 AF AMP
D26~29 BM 1N60
Q18 Buff AMP
Q1 IF AMP
2SC1000
MIC
MIC GAIN
2SC 733(Y)
2SC 733(Y)
3SK35
XF1 SSB
8.83MHz
3SK35
Q17 Buff
TPS
CONUTER
CAR LEVEL
2SC 460(B)
XF2 CW
CAR2
CAR ASSY UNIT
CW FSK 8830.7
FSK(N)8830.53
FSK(W)8829.85
TX ONLY
X1
Q1 CAR2 OSC
Q2 Buff
Q3 SW
2SC 460(B)
2SC 460(B)
2SC 460(B)
SSB TX/RX, CW & FSK RX
X1 LSB FSKR 8828.5
X2 USB CWR 8831.5
Q1 CAR1 OSC
Q2 Buff
Q3 Buff
2SC 460(B)
2SC 460(B)
2SC 735(Y)
IF SHIFT
Q14 MON DE
Q13 AMP
Q12 MON AMP
2SK19
2SC 460(B)
2SC 460(B)
D9~12 BD 1N60
Q3 IF AMP
Q2 IF AMP
3SK35
3SK35
Q3 AF PA
TA 7201P
Q2 AF AMP
2SC 1000(GR)
Q1 Pre AMP
2SC 1000(GR)
SP
AF GAIN
TONE SW
Q15 AGC AMP
Q16 AMP
2SC 733(Y)
2SC 733(Y)
RF GAIN
FIX-VOX UNIT
ANTI VOX
Q10 ANTI VOX AMP
Q11 AMP
Q7 8 SHUNIT
Q9 RL CONT
2SC 733(Y)
2SC 733(Y)
2SC733(Y)
2SA562(Y)
RL1
RL2
X2
Q4 VOX AMP
Q5 AMP
Q6 DELAY
Q13 DC-DC OSC
D20~23 REC
VOX GAIN
2SC 733(Y)
2SC 733(Y)
2SA562(Y)
2SK735(Y)
1S1555
6V
DELAY
Q12 SIDE TONE OSC
FIXCH Q1 OSC
Buff AMP
Q3 Buff
KEY
2SC 733(Y)
2SK 196(B)
2SC 460(B)
2SC 460(B)
PLL ASSY
5.5~5.0MHz
AF-AVR UNIT
Q7 BOOSTAMP
14V
2SA 496(Y)
9V
2SC392
2SC372
Q6 AMP
Q4.5 AVR CONTAMP
VFO UNIT
Q1 VFO OSC
Q2 Buff AMP
Q3 Buff
Q4 Buff
3SK22
2SK19
2SC 460(B)
2SC 460(B)
5.5~5.0 MHz

# CK DIAGRAM

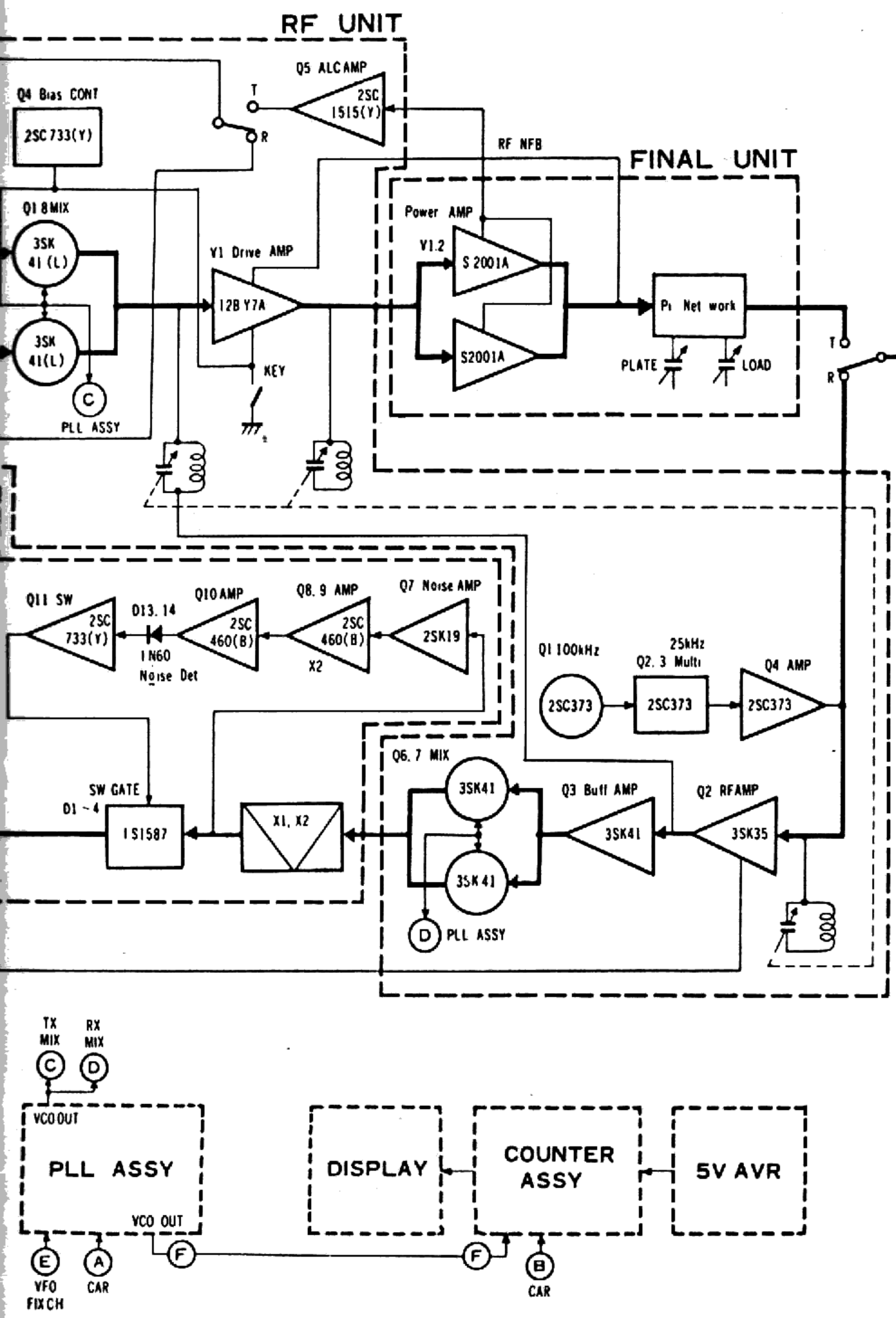


CAR FREQ

| MODE | FREQ | OSC |
|---|---|---|
| LSB | 8828.5 | CAR1 |
| USB | 8831.5 | CAR1 |
| CW(T) | 8830.7 | CAR2 |
| CW(R) | 8831.5 | CAR1 |
| FSK S | 8830.7 | CAR2 |
| FSK MN | 8830.53 | CAR2 |
| FSK MW | 8829.85 | CAR2 |
| FSK(R) | 8828.5 | CAR1 |

HET RFEQ(VCO)

| BAND | FREQ |
|---|---|
| JJY wwV | 23.83 ~ 24.33 |
| 1.8 | 10.63 ~ 11.13 |
| 3.5 | 12.33 ~ 12.83 |
| 7 | 15.83 ~ 16.33 |
| 14 | 22.83 ~ 23.33 |
| 21 | 29.83 ~ 30.33 |
| 28 | 36.83 ~ 37.33 |
| 28.5 | 37.33 ~ 37.83 |
| 29 | 37.83 ~ 38.33 |
| 29.5 | 38.33 ~ 38.83 |
| AUX | |

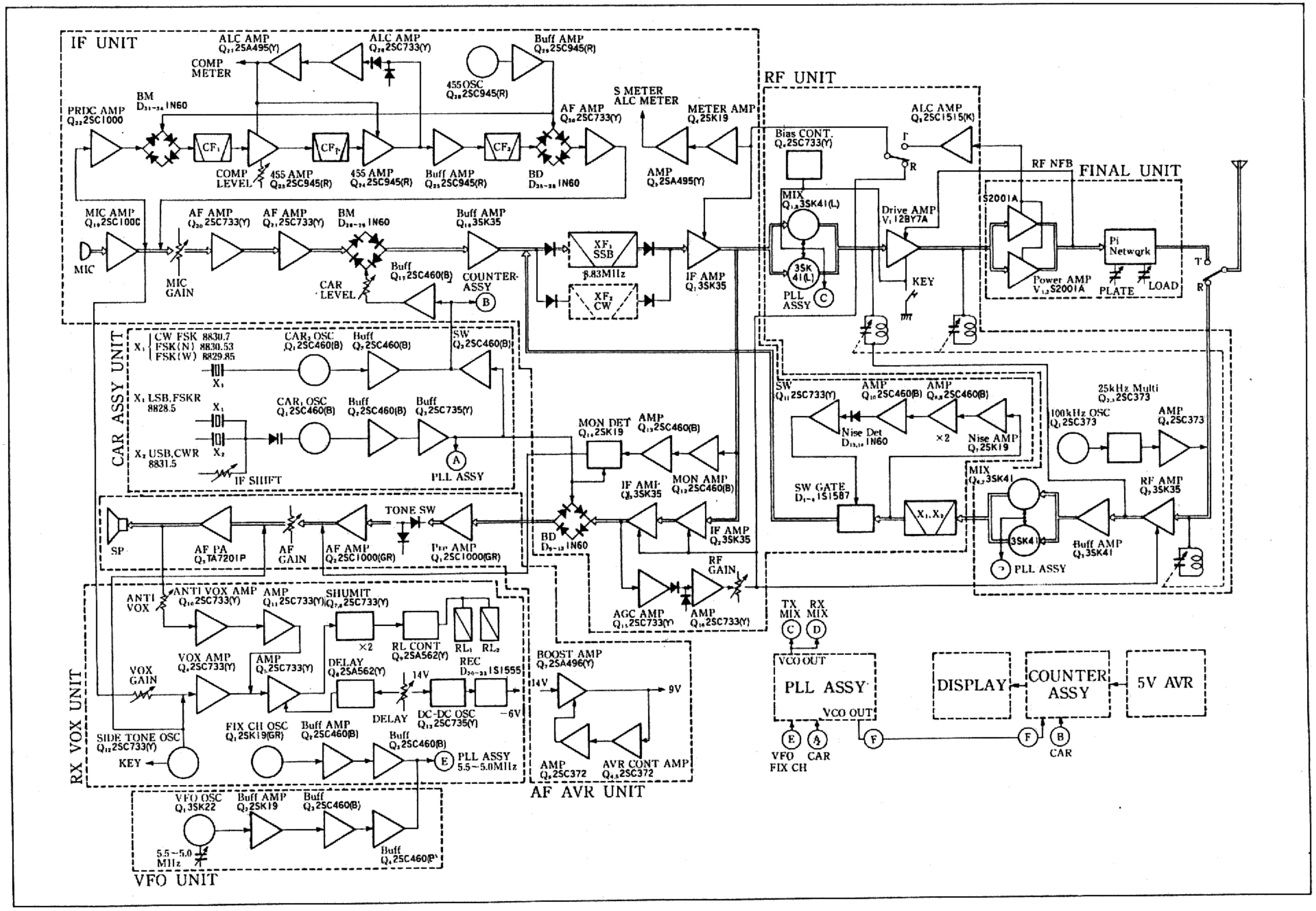


**Fig. 5 TS-820 Black Diagram**

# FEATURES

1. **HF all-band SSB/CW/RTTY transceiver employing PLL system**
   This equipment is a SSB/CW/RTTY transceiver covering 1.8 to 29.7 MHz frequency bands (WWV; 15 MHz) in which an ideal circuit configuration has been achieved by employing a newly developed PLL technique.

2. **Excellent spurious radiation characteristic and receiving two-signal characteristic**
   Thanks to employment of a FET balanced type mixer in each of the transmitting and receiving circuits and combination of MOS FET and a single conversion system, excellent performance is obtained in both the spurious radiation characteristic and receiving two-signal characteristic.

3. **Built-in IF shift circuit**
   The IF shift circuit used, also called a pass-band tuning circuit, shifts the pass-band of intermediate frequency without changing the received frequency. Where there is radio interference, the pass-band can be shifted or the receiving frequency response can be set to a desired band only by manipulating one control knob.

4. **Built-in RF processor**
   This transceiver is provided with a unique speech processor developed by KENWOOD. This circuit serves for compression with small time constant at 455 kHz. Due to processing at high frequency, the resulting distortion is minimized and deterioration of the tone quality is prevented unlike clippers.

5. **Employment of RF negative feedback**
   RF negative feedback is applied between the final transmitting stage and the driver stage to suppress cross modulation distortion. The good-reputation high-quality, transmission radio waves are improved further by combination use of the amplifier type ALC and RF negative feedback.

6. **Newly developed analogue dial**
   Due to combination use of the newly developed monoscale dial and subdial, it is very easy to read frequencies. Since such a circuit that a carrier frequency is kept unchanged regardless of change-over of operation mode is employed, each frequency is accurately indicated only by one dial index.

7. **Rigid construction and excellent operability**
   Since die cast is employed for the front panel and the chassis is constructed in the sufficient consideration of strength, the transceiver maintains high mechanical stability even when installed on a vehicle. The reduction gears of the PLATE and LOAD knobs, the shape and arrangement of knobs designed on the base of human engineering permit superb operability together with the dial construction easy to read.

8. **Built-in monitoring circuit**
   Unlike conventional transceivers, TS-820 incorporates a monitoring circuit that permits the operator's speech to be monitored by himself during transmission. This circuit can be used to check the modulated conditions or adjust the RF processor.

9. **Audio frequency response change-over circuit to be used during SSB or CW receiving.**
   During CW receiving, audio frequency band is automatically narrowed to obtain tone quality easy to receive.

10. **Built-in fixed channel circuit with RIT (crystal; option)**
    This transceiver is provided with a fixed channel circuit having RIT. Since cross operation is possible between this circuit and built-in VFO, high technical operation is enjoyable.

11. **Transverter connection terminal provided**
    This transceiver permits combination use with transverter TV-502 (for 2m) only by connector connection. Automatic change-over can also be effected between HF and VHF by using the power switch provided on the transverter.

12. **Built-in AC power supply and attachable DC-DC converter**
    Mobile operation of the transceiver can be performed by equipping a DC-DC converter unit (DS-1) available at option.

13. **Wide variety of auxiliary circuits and divice**
    This transceiver is provided with wide variety built-in accessory circuits such as a noise blanker, VOX circuit, side tone circuit, maker circuit, built-in speaker, AGC 3-position change-over switch, heater switch, IF OUT terminal and connection terminals for a linear amplifier.

14. **Systematized optional equipment**
    Optional equipments are fully provided such as remote VFO VFO-820, external speaker SP-520, CW filter YG-88C, digital display DG-1, transverter TV-502 microphone MC-50 and low-pass filter LF-30A.

15. **Use of digital display dial DG-1 (option)**
    1) Digital display dial
       The digital dial of TS-820 indicates transmit and receive frequencies using carrier, VFO and local oscillator signals instead of converting VFO frequencies. Thus, accurate frequencies can be read at all times at any band and any operating mode.
       Since the accuracy of frequencies is set up only by the 1 MHz standard oscillator, frequencies can be read accurately up to 100 Hz order by calibrating the oscillator with WWV.
       The green indication on the dial assures many hours of fatigueless operation.
    2) D.H. (display hold) switch
       By pressing the D.H. switch, the frequency read on the digital remains on, thus serving as a memory system.

# OUTLINE / CIRCUIT DESCRIPTION

## OUTLINE

The block diagram of TS-820 is shown on page 4.
The receiver part employs a single superheterodyne system, while the transmitter part employs a single conversion system having a filter type SSB generator. The intermediate frequency used is 8830 kHz.
The local oscillator employs a phase locked loop (PLL) circuit controlled by VFO and the mixer circuit is of a balanced mixer type using dual-gate MOS FET in each of transmission and reception. Thus, spurious radiation is minimized during transmission, and the desired signal can be received without being interferred by large signals of adjacent channel or spurious radiation, thus obtaining superb transmitting and receiving performances.
The IF shift function (electronic pass-band tuning) is also realized by making the most of PLL characqeristic and use of one SSB filter permits the same effect as in use of exclusive filters for USB and LSB.
In addition to the conventional accessory functions, the various circuits newly developed such as RF speech processor and transmission monitor are provided.

## CIRCUIT DESCRIPTION

### TRANSMITTER SECTION

A voice signal applied to the microphone is fed to IF unit and amplified by microphone amplifiers Q19 ~ Q21, which performs faithful amplification using low-noise type transistors.
The audio frequency signal, after amplified, is applied to a ring modulator consisting of four diodes D26 ~ D29. The DSB output of the ring modulator is passed through buffer amplifier Q18 and a crystal filter. Then after converted into SSB signal, the output is further IF amplified by Q1 to be applied to the transmitter mixer in RF unit.
The transmitter mixer is of a double balanced mixer configuration using two MOS FETs Q1 and Q8 (3SK41). In turn the output of VCO (voltage controlled oscillator) controlled PLL is used for the local oscillation, thereby minimizing spurious radiation. The SSB signal, the transmission signal converted into the desired frequency, is amplified by transmitter driver tube 12BY7A and then is applied to the final stage power amplifier.
The final stage tubes are operated in AB1 class to amplify SSB signal with low distortion and the output thus obtained is fed to the antenna through a $\pi$ matching circuit.
RF negative feedback is applied between the final stage and the driver stage to suppress the cross modulation distortion further.

### RECEIVER SECTION

The incoming signal is passed through RF ATT switch and after attenuated by approx. 20 dB, if necessary, is applied to RF unit, and then RF amplified by Q2. The amplified signal is passed through buffer amplifier Q3 and is mixed with the VCO output by balanced mixer consisting of two dual-gate MOS FETs Q6 and Q7, thereby being converted in IF signal of 8830 kHz.
This signal is fed to IF unit and, after passing through the noise blanker circuit and crystal filter, is amplified by three stages amplifiers Q1, Q2 and Q3 (3SK35) and then converted into AF signal by a ring detector consisting of four diodes D9 through D12.
The AF signal thus obtained is applied to AF AVR unit and amplified by Q1, Q2 and Q3 to a sufficient level enough to drive the speaker. The frequency response of the AF amplifier is changed over to that for CW or SSB in interlocking with MODE switch.

## UNIT

### IF UNIT (X48-1150-00)

The IF unit is a very principal unit provided with many functions in both transmission and reception. It consists of a microphone amplifier, ring modulator, crystal filter, transmitter/receiver IF amplifier and ring detector as well as a noise blanker, AGC amplifier, S meter amplifier, speech processor and monitoring circuit.
Crystal filters are equipped only for SSB, but CCW filters available at option can be attached easily.

### RF UNIT (X44-1150-00)

This unit includes the ALC amplifier and the block bias circuit, centering around the transmitter and receiver RF amplifier stage and mixer circuit. They are arranged together with the coil pack unit of centralized tuning circuit.

### COIL PACK UNIT (X44-1140-00)

Individual interstage coils of each band, band change-over rotary switch and variable capacitors are arranged neatly in this unit, while operating in combination with the RF unit.

### PLL ASSEMBLY UNIT (X60-1010-00)

This consists of PD unit (X50-1340-00) and VCO unit (X50-1330-00) to compose transmitter and receiver local oscillators. Oscillation output having the same stability as in the built-in VFO is obtained for each frequency band.
The PD unit consisting of crystal oscillators for respective frequency bands, two mixers, a wave shaper and a phase comparator generates a control voltage for VCO (voltage controlled oscillator) as a reference oscillator, and also configurates an electronic IF shift loop arrangement using the carrier signal supplied from outside.
The VCO unit consists of oscillator for respective frequency bands using FET (VCO), buffer amplifier and the oscillation output stopping circuit, which stops the oscillation output when PLL fails, and its output frequency is controlled by the control signal fed from the PD unit.
Both units use diode switches for band change-over.

### COUNTER ASSEMBLY UNIT (X60-1020-00) (DG-1: Option)

This unit consists of a countermixer unit (X54-1150-00) and a counter unit (X54-1160-00); the former mixes VCO output (the local oscillation signal of mixer) with a carrier signal into actual operating frequency and the latter counts the digital value of that frequency.

# CIRCUIT DISCRIPTION / FUNCTIONAL DISCRIPTION

These circuits are strictly housed in a shield case. Since all local oscillator signals are read after combined with carrier signals, actual operating frequency can be always counted. The output of the counter is picked out as a signal for driving the display tube and supplied to the display unit.

### DISPLAY UNIT (X54-1170-00) (DG-1: Option)

The operating frequency counted by the counter unit is indicated by a 6-digit fluorescent display tube. Use of blue display color won't weary the operator's eye.

### 5V AVR UNIT (X43-1220-00) (DG-1: Option)

This unit is a 5-volt stabilized power supply for the counter unit. Due to use of ICs, the specified voltages are cotained without making any adjustment.

### CARRIER ASSEMBLY UNIT (X60-1000-00)

This unit consists of a CAR-1 unit X50-1310-00 and CAR-2 unit X50-1320-00. CAR-1 unit includes oscillator circuits for LSB and USB transmission and reception and for CW and FSK reception, while CAR-2 unit includes oscillation circuits for CW and FSK transmission.
These oscillators are crystal oscillators that serve as carrier generator during transmission and as BFO for the ring detection during reception. Part of the output is applied to the PLL unit and counter unit.

### AF-AVR UNIT (X49-1080-00)

This unit includes AF amplifier in the final stage of the receiver section and the 9-volt stabilized power supply. The frequency response of the AF amplifier can be automatically changed over to that for CW or CCW with tone switching diodes D1 and D2 by changing over the band switch.

### FIX-VOX UNIT (X50-1350-00)

This unit includes a fixed-channel oscillator circuit, VOX circuit for performing stand-by operation by means of voice and −6-volt generator circuit for block bias.

### VFO UNIT (X40-1110-00)

Since the PLL circuit is controlled by VFO signal, the frequency stability of TS-820 is essentially determined by that of VFO. The circuit consists of 2 FETs, 2 transistors and 3 diodes, and the oscillation frequency is 5.0 to 5.5 MHz.

### MARKER UNIT (X52-0005-01)

A signal of 100 kHz is generated by driving a crystal quartz by Q1. This oscillation frequency can be fine adjusted by ceramic trimmer TC1 inserted into the collector circuit. The output of Q1 is wave-shaped by diode D1 and thereby the free-running multivibrator Q2, Q3 is triggered. Although the free-running oscillation frequency exists around 25 kHz, it is accurately synchronized with 25 kHz by the synchronizing signal of the output of the crystal oscillator. This oscillation frequency is phase inverted by Q4 and then taken out as the output.

### FINAL UNIT (X56-1200-00)

This unit includes the final stage power amplifier compartment except for the output-side $\pi$ matching circuit.

### RELAY UNIT (X43-1190-00)

This unit consists of a stand-by relay and smoothing capacitors for DC low-voltage power supply and a 5-volt stabilized power supply for the PLL circuit. The relay in this unit is mainly used to change over DC signal such as block bias or "cross" operation control.

### HV UNIT (X43-1110-00)

This unit includes voltage-dividing resistors for measuring the plate voltage of S2001A and voltage dropping resistors for reducing the screen voltage of S2001A with the MODE switch set to TUNE position.

### RECTIFIER UNIT (X43-1090-02)

This unit contains all the rectifier circuits of TS-820. The high-voltage line of 800-volt uses voltage doubler rectifier, the 300-volt/210-volt/C line uses a half-wave rectifier and the 14-volt line uses a bridge receitifer.

### INDICATOR UNIT (X54-1180-00)

TS-820 permits 16 kinds of the so-called "cross" operations using internal VFO, remote VFO and internal fixed channels to be optionally selected by the operation of the function switch. To perform this operation smoothly it should be able to be checked instantlh which is in operation among two VFOs and internal fixed channels. Thus, this unit indicates the individual operations of "VFO", "ATT", "FIX" and "RIT" using GaP light-emitting diodes.

### VOX-VR UNIT (X54-1190-00)

Three variable resistors VOX GAIN, ANTI VOX and DELAY are directly mounted onto a printed circuit board.

## FUNCTIONAL DESCRIPTION

### SINGLE CONVERSION SYSTEM

Almost all conventional transceivers for amateur use employ the double conversion system as shown in **Fig. 1**, particularly with the first local oscillator fixed and the second local oscillator variable. This double conversion system has also been employed by KENWOOD in the transceivers up to TS-520.
The double conversion system has the following features.

1. Multiple-band arrangement can be obtained comparatively easily by selecting the first local oscillator frequency.
2. The first IF frequency is fairly free to be set.
3. Mixer noise is apt to increase due to twice frequency conversions.
4. Excessive level signals are fed to the second mixer. Thus, the two-signal characteristic might be deteriorated.
5. Due to many internal oscillators and mixers beat interference and spurious radiation are liable to be caused.

# FUNCTIONAL DISCRIPTION

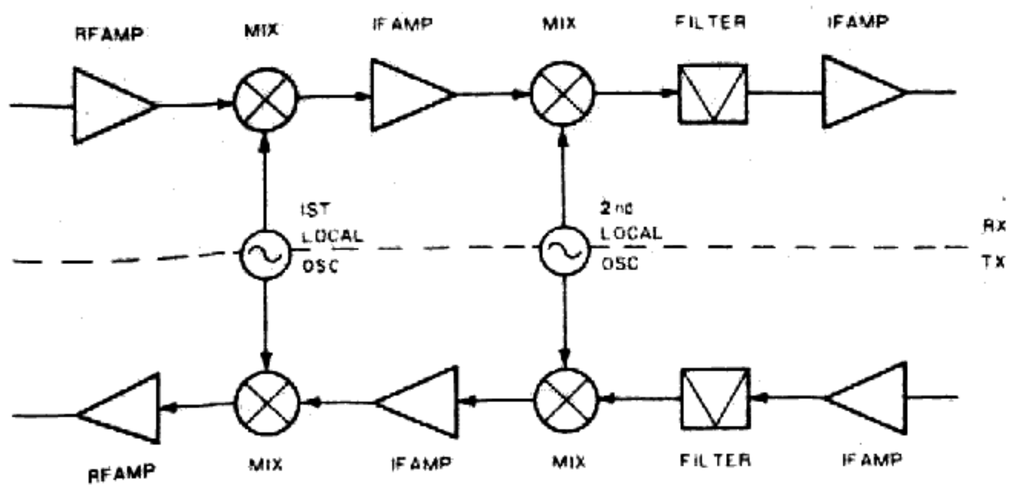


**Fig. 1 Typical double conversion type**

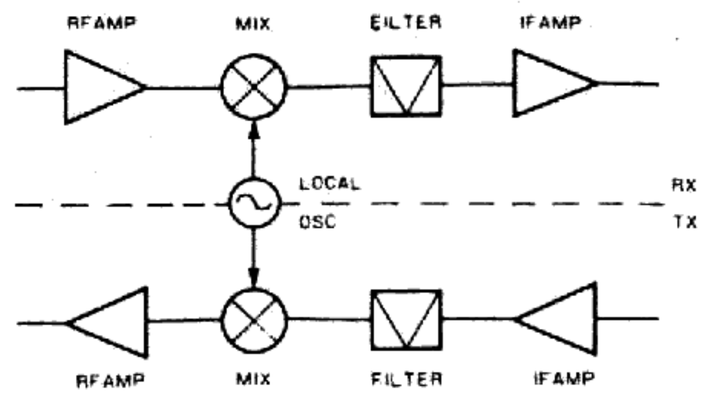


**Fig. 2 Single conversion type**

In turn the single conversion system has a simple circuit configuration, as compared with the double conversion system, as shown in **Fig. 2**, and it is considered to be provided with the following features.

1. Since only one mixer is used, mixer noise level is low.
2. Since the number of oscillators can be reduced, beat interference in receiving and spurious radiation in transmitting are eliminated comparatively.
3. It is comparatively difficult to increase the number of bands. Thus, the local oscillator circuit configuration becomes complicated.
4. IF frequency cannot be set to a higher frequency (due to the IF crystal filter used).

TS-820 is designed to enhance the two-signal characteristic in receiving and on suppression of spurious radiation in transmitting. Thus, it employs the single conversion system with PLL type local oscillator. Employment of the PLL system permits various merits such as unification of the dial pointer and IF shift function.

The circuit configuration of TS-820 is as shown in the block diagram. As shown in **Fig. 3** (Frequency diagram) TS-820 is of a single conversion type using PLL local oscillator and crystal filters of 8.83 MHz IF frequency.

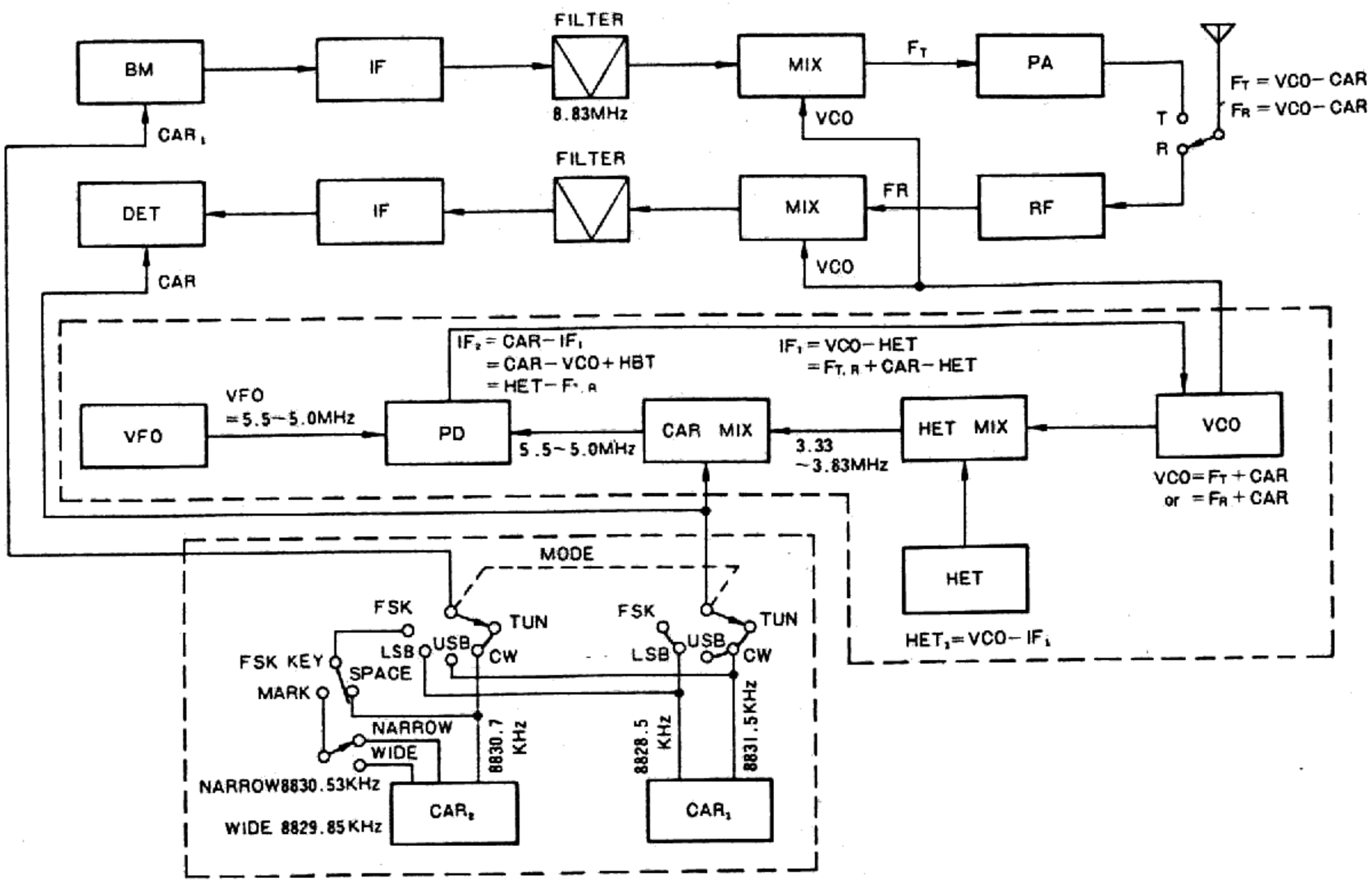


| MODE | FREQ. KHz | OSC |
|---|---|---|
| LSB | 8828.5 | CAR1 |
| USB | 8831.5 | " |
| CW(T) | 8830.7 | CAR2 |
| CW(R) | 8831.5 | CAR1 |
| FSK(R) | 8828.5 | " |
| FSKS | 8830.7 | CAR2 |
| FSKMN | 8830.53 | " |
| FSKMW | 8829.85 | " |

| BAND | VCO | HET | BAND | VCO | HET |
|---|---|---|---|---|---|
| JJY/WWV | 23.83−24.33 | 20.5 | 29 | 37.83−38.33 | 34.5 |
| 1.8 | 10.63−11.13 | 7.3 | 29.5 | 38.33−38.83 | 35.0 |
| 3.5 | 12.33−12.83 | 9.0 | AUX | | |
| 7 | 15.83−16.33 | 12.5 | | | |
| 14 | 22.83−23.33 | 19.5 | | | |
| 21 | 29.83−30.33 | 26.5 | | | |
| 28 | 36.83−37.33 | 33.5 | | | |
| 28.5 | 37.33−37.83 | 34.0 | | | |

**Fig. 3 TS-820 frequency diagram**

# FUNCTIONAL DISCRIPTION

### RF SPEECH PROCESSOR

During DX communication, TS-820 can increase talk power by using the speech processor, in which audio frequency signal is converted into 455 kHz SSB signal and compression processing is performed with a small time constant. Thus, signal distortion is minimized and tone quality is prevented from being deteriorated, as compared with the conventional clipper system. The compression level can be adjusted by the COMP LEVEL knob, while watching the meter scale.

The audio frequency signal applied to the microphone is amplified by Q22 to the level required for the balanced modulator circuit D31 to D34 and converted into 455 kHz. Q28 is an oscillator for 455 kHz and Q29 is a buffer amplifier. The voice signal converted into 455 kHz is amplified sufficiently by Q23 and Q24, subjected to automatic gain control by Q26 and Q27, and compression-processed.

The processor level is adjusted by changing the emitter bias of Q23 with the RF PRO variable resistor.

The signal sufficiently compression-processed is buffer amplified by Q25 and balance detected by D35 to D38 to be converted into audio frequency again (refer to **Fig. 4**).

### MONITORING CIRCUIT

Since TS-820 is provided with a monitoring circuit that permits the operator to hear his voice during transmission, it can be used to check the modulated condition or to adjust the RF speech processor. This circuit is incorporated in the IF unit. When the MONI switch mounted on the front panel is turned ON, the monitoring circuit is biased and operated. The signal is passed through the IF crystal filter of 8.83 MHz, amplified by one-stage IF amplifier, buffer amplified by Q12 in the monitoring circuit, further amplified by Q13, product detected by FET Q14, and thereby demodulated into AF signal. The AF signal thus obtained is then applied through VR4 to Q3 in AF AVR unit and thereby power amplified. This circuit is energized only in SSB transmission. D16 and D17 act as a diode switch to prevent the carrier from leaking into IF circuit (refer to **Fig. 5**).

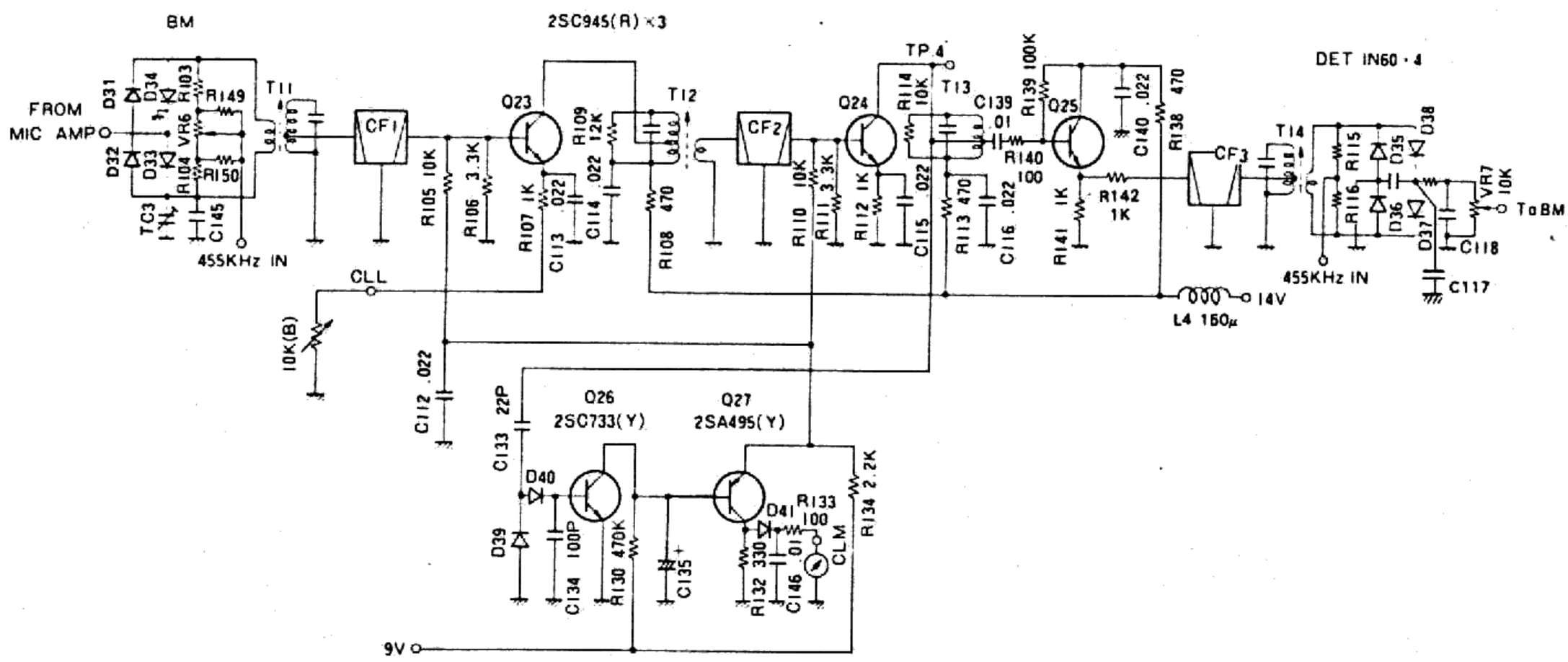


**Fig. 4 RF speech processor**

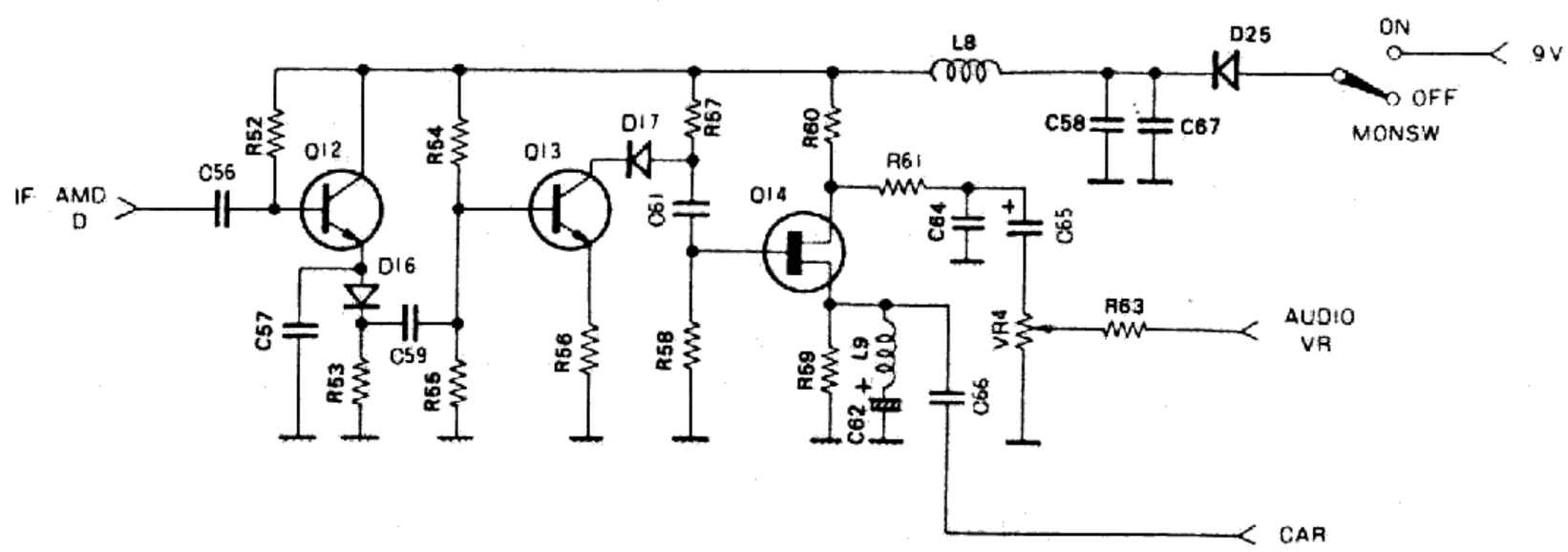


**Fig. 5 Monitor circuitry**

# FUNCTIONAL DISCRIPTION

## PLL CIRCUIT

**Fig. 6** shows the circuit configuration of the PLL system developed in TS-820. In this system, VCO signal is mixed with HET signal and thereby converted into a signal of 3.33 to 3.83 MHz common to all bands, which is further mixed with a carrier to be converted into 5.5 to 5.0 MHz. This signal is phase compared with VFO signal of 5.5 to 5.0 MHz. The comparison output thus obtained is returned to VCO to lock it.

The HET mixer serves to convert the different frequencies of individual bands into the same frequency, whereas the carrier mixer acts to keep the transmitting and receiving frequencies constant regardless of change-over of the MODE switch by applying a carrier signal to the PLL loop and to perform IF shift. **Fig. 7** shows the block diagram of the PLL part.

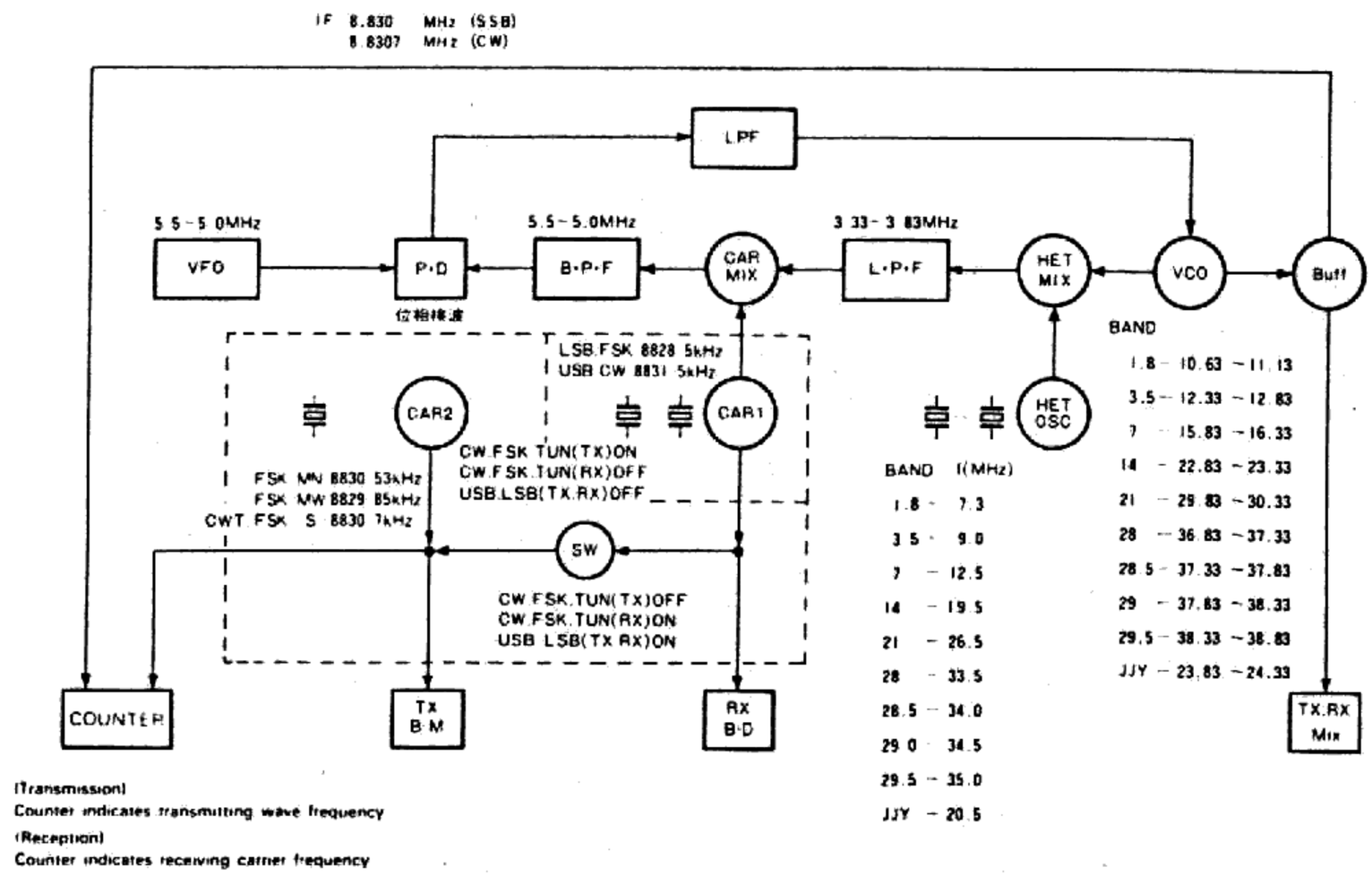


**Fig. 6 PLL system**

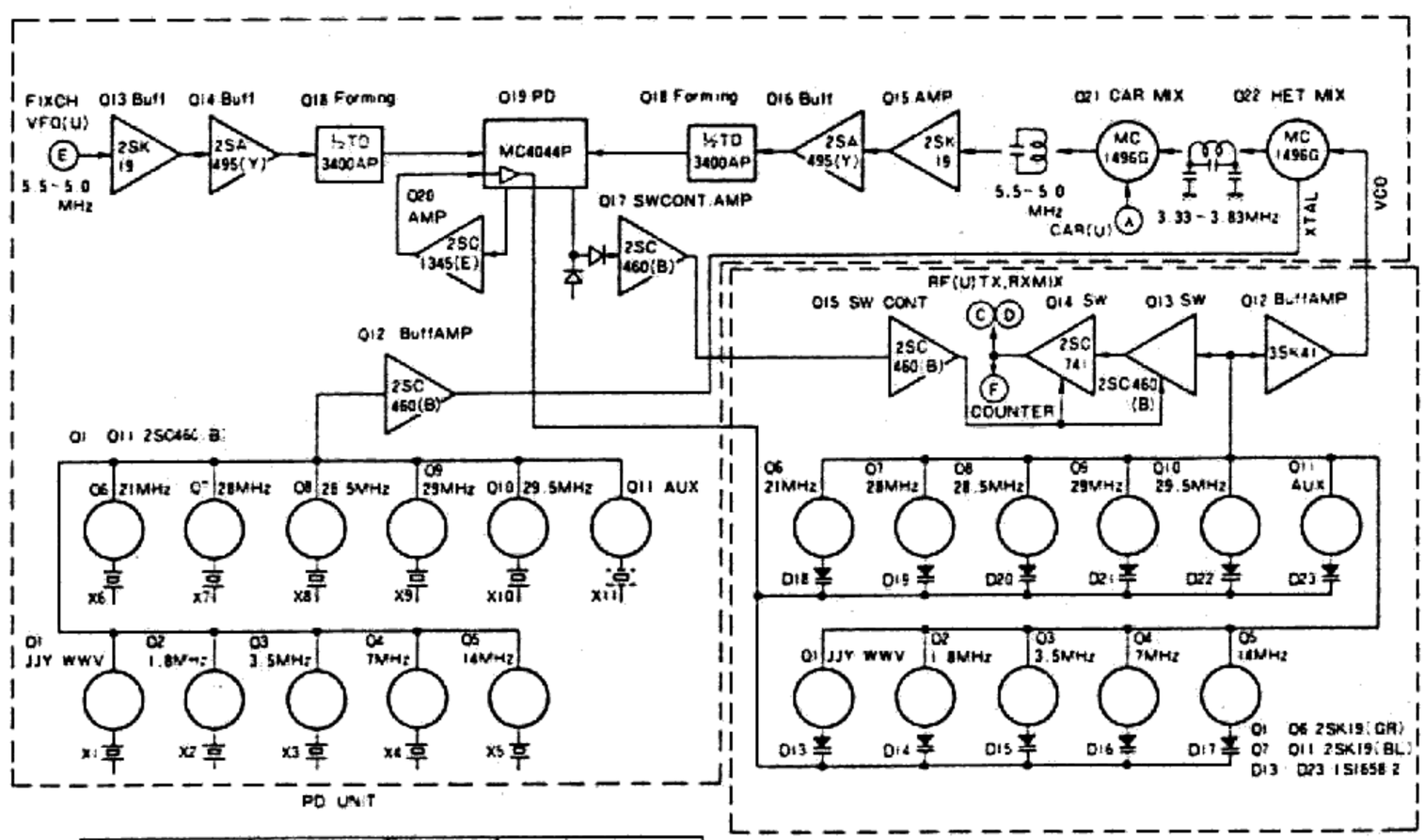


| BAND | XTAL | VCO | BAND | XTAL | VCO |
|---|---|---|---|---|---|
| JJY/WWV | 20.5 | 23.83~24.33 | 28 | 33.5 | 36.83~37.33 |
| 18 | 7.3 | 10.63~11.13 | 28 | 34.0 | 37.33~37.83 |
| 35 | 9.0 | 12.33~12.83 | 29.5 | 34.5 | 37.83~38.33 |
| 7 | 12.5 | 15.83~16.33 | 29 | 35.0 | 38.33~38.83 |
| 14 | 19.5 | 22.83~23.33 | AUX | | |
| 21 | 26.5 | 29.83~30.33 | | | |

**Fig. 7 PLL assy**

# FUNCTIONAL DISCRIPTION

VCO is provided with independent oscillators for the respective bands up to Q1 to Q11, which can be changed over by the band switch. The stability of this circuit is determined by HET, CAR and VFO. Since HET and CAR are crystal oscillators, it is considered to be determined only by the stability of VCO. The high stability of VCO itself is also essential as the major point in design in order to improve C/N of VCO output and prevent unlocking due to temperature variation. Thus, FET is used as the oscillator transistor to strictly compensate for temperature variation in the coils. The output of this VCO is applied to the transmitter and receiver mixers through Q13 and Q14 which serve as a buffer and also switching amplifier.

As in VCO, HET is provided with independent oscillators for the individual bands, which are changed over by the band switch in interlock with VCO. This change-over is effected by + B power and switching diodes. The oscillator is a Colpitts type non-adjustment circuit.

The CAR mixer preceded by the HET mixer uses MC-1496G for balanced mixer to prevent spurious radiation and a band-pass filter is inserted at its output. If a spurious signal is contained in the output of this carrier mixer, it may be mixed with the output of PD and appear at VCO.

The carrier oscillator circuit is divided into CAR 1 and CAR 2; the former is in charge of CW (receive), USB, LSB, FSK (receive) and the latter is charge of CW (transmit) and FSK (transmit). The crystal oscillators used are three of 8828.5 kHz, 8831.5 kHz (AR1) and 8830.7 kHz (AR2) and other oscillators are of a variable frequency type using varicap diodes. The signal to be applied to PLL loop is generated at the CAR 1 side. Thus, when CW or FSK signals, the frequencies of which are different between transmitting and receiving, are transmitted, PLL loop is composed of CAR 1 and the transmitting carrier is generated by CAR 2.

The output of the carrier mixer, after amplified by buffer amplifier Q15 and Q16, is wave shaped by NAND gate Q18 (TD3400AP) and applied to MC-4044P. Meanwhile, the output of VFO, after amplified by buffer amplifier Q13, Q14, is wave-shaped by Q18 and fed to MC-4044P.

MC-4044 consists internally of a phase detector (PD), charge pump and amplifier, and it is used in this transceiver as shown in **Fig. 8**. The output of PD #1 is fed to the varicap of VCO through the charge pump and active filter. The output D2 of PD #2 becomes high level (constant) when either (or both) input signal is removed. By utilizing this quality, it is used as OFF circuit for VCO. If the TS-820 function is changed over to remote VFO without connecting remote VFO, PLL is not locked. Thus, under such a condition, VCO output is automatically turned OFF.

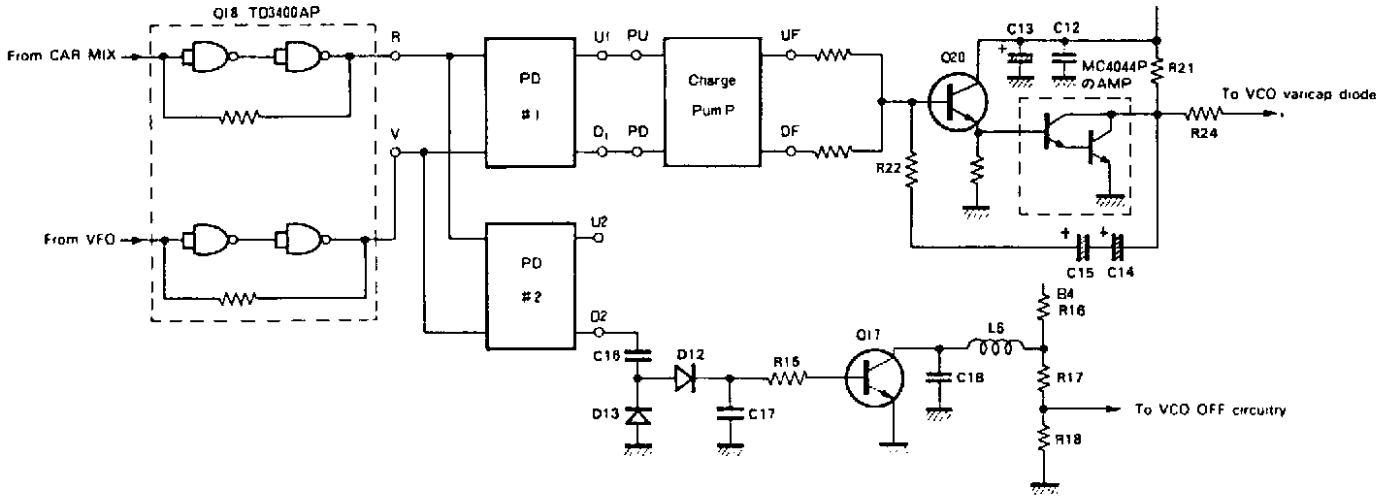


**Fig. 8 TS-820 phase detector circuit**

# FUNCTIONAL DISCRIPTION

This PLL part consists of two printed circuits boards of VCO part and PD/HET part. These printed circuits boards are shielded from each other and the overall unit is housed in a shielding case, thus achieving full shield effect.
The PLL circuit of this transceiver is provided with the following features.

1. Since the phase comparison is performed at a frequency as high as 5 MHz, the response speed is rapid and C/N is improved. When "cross" operation is performed together with remote VFO or fixed channels by using VOX, the signal is interrupted at the beginning if the lock time is not long. When the reference frequency is as high as 5 MHz, the cut-off frequency of the active filter can be selected at high frequency and therefore no problem is offered here.
2. Since VCO is used independently in each band, the C/N of the oscillator is improved.
3. Since the output of VCO is applied directly to the transmitter and receiver mixers, the spurious characteristic is excellent. This is one of the large merits, as compared with the premix system.
4. Since MC-4044 is used for phase comparison and therefore the variable range of VCO is narrow, there is no possibility of unlocking.
5. Since VFO uses the conventional range of 5.5 to 5.0 MHz, TS-820 has compatibility with other KENWOOD's transceiver models.

The VFO used is basically the same as the traditional VFO. VFO-520 can be used as remote VFO as it is.

### IF SHIFT CIRCUIT

This IF shift operation shifts the carrier frequency by ±1.7 kHz and thereby moves IF frequency and the pass-band of the crystal filters. Thus, AF output can be received in the frequency response of ±1.7 kHz high-cut or low-cut. As shown in **Fig. 9**, the IF shift circuit is energized only during receiving and deenergized during transmitting, fixed by VR1 in CAR-1 unit. This function is achieved by employment of use of PLL circuit in the local oscillator part. The feature of the IF shift circuit is as follows:

1. Tone quality adjustment and interference elimination during SSB receiving. During USB mode operation, the receiving characteristics of low-cut and high-cut are obtained by turning the IF SHIFT knob clockwise and counterclockwise respectively. (Opposite to the above during LSB mode operation.) Thus, the received signal can be heard in the desired tone quality, and interference from the sidebands of adjacent channel signals, if any, can be eliminated by using the IF shift circuit.

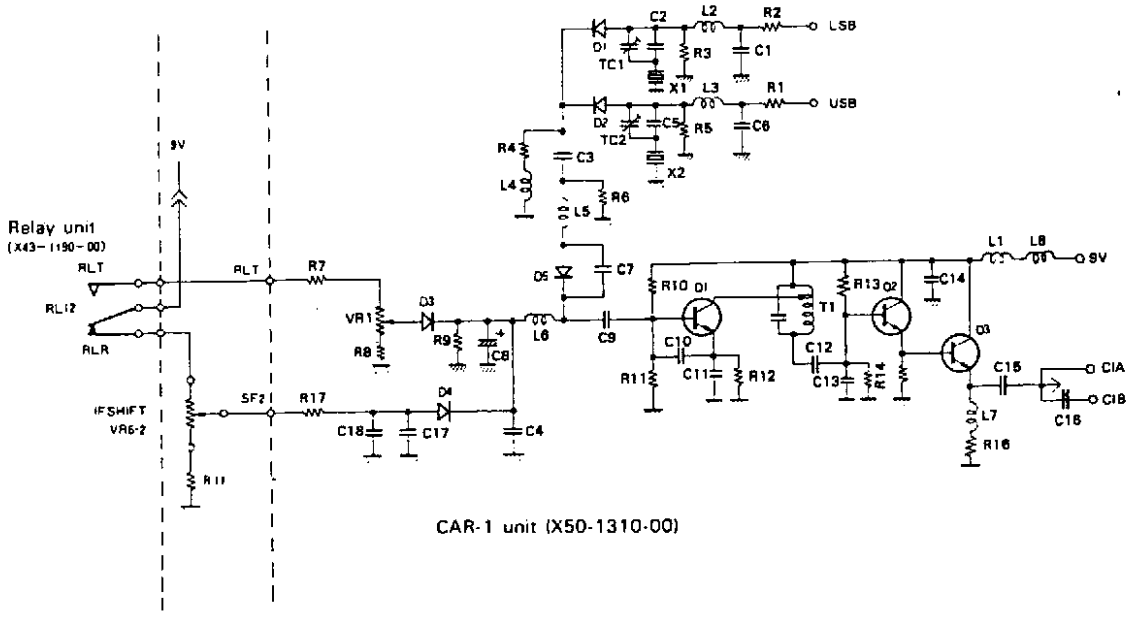


Fig. 9 IF SHIFT circuit

2. Adjustment of tone quality during CW mode operation

O When no CW filter is installed:

When the main tuning knob is adjusted so that the beat tone becomes approx. 800 Hz while receiving CW signal with the IF SHIFT knob set to the center position and the RIT switch turned OFF, the transmitting frequency of the own station can be set to that of the party station. After this zero-in, turn the RIT switch on and turn the RIT knob to sound clear. When there is interference, it might be eliminated by turning the IF SHIFT knob. However, attaching of the exclusive CW filters is more effective (YG-88C at option).

O When CW filter is installed:

Set the IF SHIFT knob at the center position and turn OFF the RIT switch. While receiving a signal, set the main tuning knob until S meter indicates maximum. The received tone then becomes approx. 800 Hz and the transmitting frequency is set to that of the party station. Turn ON the RIT switch, adjust the RIT knob to the desired position and set the IF SHIFT knob to the highest receiving level.

O When the digital display is provided:

The digital display indicates the frequency of carrier signal (BFO signal) and therefore during CW receiving, it indicates the frequency shifted from the transmitting frequency of the party station by the receiving beat frequency (when the IF SHIFT knob is set to the center position, the lower-side beat frequency is indicated).

If zero-in operation is performed by using the digital display, follow the procedure shown below.

Turn ON the RIT switch and turn the RIT knob, while operating the stand-by switch, until the frequency indication is kept unchanged regardless of change-over from transmitting mode to receiving mode and vice versa. Leave the RIT knob as it is and turn the main tuning knob until the zero beat is obtained with respect to the transmitting signal of the party station (the zero beat is easy to obtain by turning the IF SHIFT knob). Through the above proc-edure, the transmitting signal can be set to that of the party station. Turn the RIT knob until the desired position is obtained.

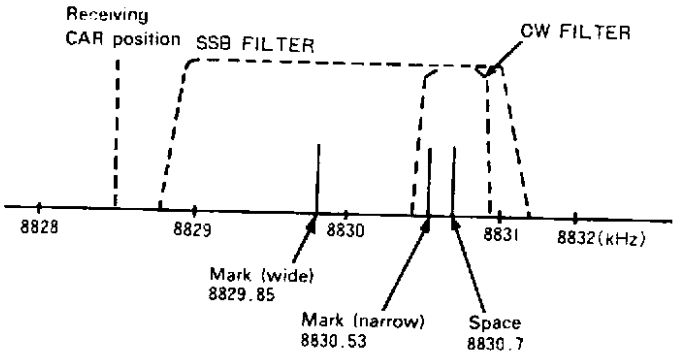


**Fig. 10 RTTY frequency**

3. When FSK (RTTY) is operated

For the RTTY operation, a demodulator and a teletypewriter are necessary. Demodulators that are operated with audio input signals with filters of 2125 /2295 Hz (NARROW, 170 Hz shift) or 2125/2975 Hz (WIDE, 850 Hz shift) incorporated can be all used for this purpose. For keying of the FSK circuit in TS-820, insert a relay coil into the closed loop circuit of the teletypewriter and connect the relay contacts to the RTTY KEY jack on the rear panel.

**Fig. 10** shows the relationship between the transmitting and receiving frequencies used in TS-820. Although the frequency deviation in the FSK circuit has been set to the NARROW side in our factory, it can also be set to the WIDE side by switching the connector as shown in **Fig. 11**. When making FSK operation in the WIDE side, turn the IF SHIFT knob counterclockwise by approx. 1.2 kHz until balance between mark signal and space signal can be obtained during receiving.

When the CW filters available at option are equipped, they can be used during the NARROW side operation by switching the connectors in the IF unit.

When the MODE switch is changed over to FSK position, the input voltage of the final stage is automatically reduced. Thus, the continuous transmission of this transceiver can be enjoyed without any anxiety.

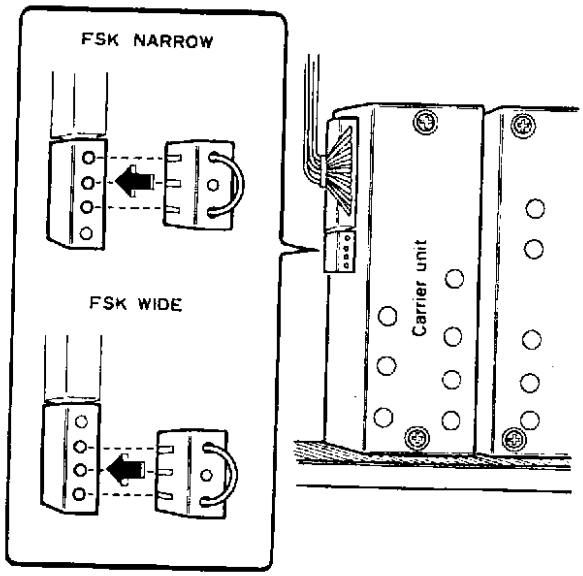


**Fig. 11 Switching of FSK, WIDE-NARROW**

# FUNCTIONAL DISCRIPTION

## AGC CIRCUIT

AGC signal is taken from the IF final stage Q3, and after amplified by Q15 and Q16, is fed to Q1, Q2 and Q3 in the IF circuit and the first stage Q2 in the RF amplifier, thereby performing GAIN control. On the collector side of Q16, each control operation of AGC-SLOW, FAST, OFF and RF GAIN is carried out. Q4 and Q5 act as the meter amplifier for AGC in receiving and as the meter amplifier for ALC during transmitting. D20 is used for AGC discharge and D21 for prevention of reverse current flow. During transmition, Q2 and Q3 are cut off since they are reversely biased by the RB line voltage.

## RF NEGATIVE FEEDBACK AND NEUTRALIZING CIRCUIT

In TS-820, the tone quality of transmitting signal has been examined more thoroughly. Without careful overall design over the entire circuitry improvement of the tone quality cannot be achieved. For example, distortion in the low frequency stage, its frequency response, distortion in the high frequency stage, level distribution and ALC have been thoroughly examined and in addition overall balance design has been considered.

To minimize the distortion in AF stage, the negative feedback is often employed as general circuit technique. However, the negative feedback for the RF circuit is actually difficult to employ since stable operation is not easily obtained due to restriction by parts arrangement and frequency response.

TS-820 applies negative feedback to the so-called tuning type amplifier circuit including interstage LC tuned circuits. (Refer to **Fig. 12**).

In the tuned type negative feedback, the plate impedance of the final stage tube and the gain are greatly changes when its $\pi$ matching circuit is adjusted. Thus, it is necessary to prevent possible undesired oscillation from occurring regardless of the set positions of the plate variable capacitor and the drive variable capacitor. TS-820 is designed so that undesired oscillation won't occur when the gain increases up to three times as large as optimum condition.

Neutralization also has large effect on the stability. If it is imperfect, phase variation increases proportionally and it is difficult to have effect from low band to high band in the case of all-band transceivers. Where variable capacitors are used for interstage tuning, sufficient neutralization is said to be difficult as compared with the $\mu$ tuning type, thus causing unstable negative feedback.

Although TS-820 employs the variable capacitor type neutralization, the rotors and stators are floated from ground and neutralization is applied and thereby the same effect as the $\mu$ tuning type is obtained.

Although the negative feedback has one effect in audio circuits since the bandwidth becomes wide, the selectivity is deteriorated in tuning type amplifiers. Thus, sufficient selectivity is required to be obtained before the driver stage in the case of such transmitter that the spurious characteristic should be improved in the driver and final stages. Since TS-820, employs a balanced mixer in the IF stage, it is not necessary to attenuate adjacent spurious signals in the driver and final stage. Thus, the driver stage is placed immediately after the mixer and negative feedback is applied, there. This transceiver applies negative feedback of approx. 6 dB by C5 and C10 and improvement of approx. 10 dB is effected by the tertiary cross modulation products.

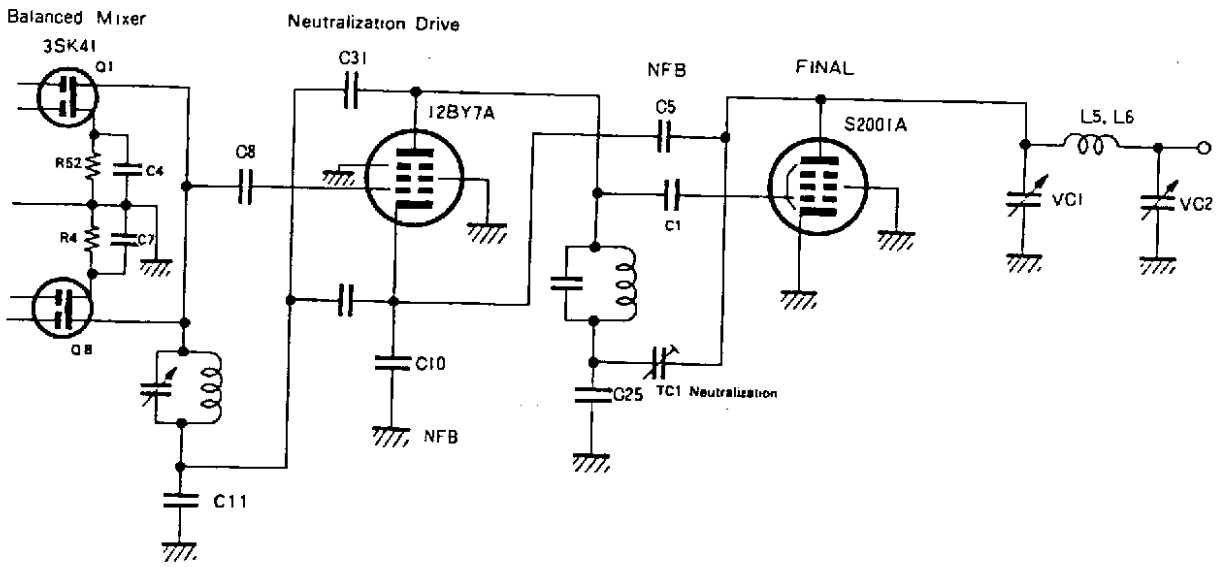


Fig. 12 RF-NFB circuit

# FUNCTIONAL DISCRIPTION

## NB CIRCUIT

The NB unit roughly consists of a signal system and noise system.

The signal converted into IF signal of 8.83 MHz is purified through a filter for removing adjacent large input interference (±15 kHz at −6 dB point in case of X1 and X2) and fed to the crystal filter through balanced type blanking gate circuit D1 ~ D4 and matching transformer T4.

When NB switch is turned ON, the received signal passed through the input filter circuit is buffer amplified by FET and its noise component only is picked out through transistors Q8, Q9 and Q10 and rectified by D13 and D14 to trigger blanking gate D13 to D4 through Q11. Q6 acts as AGC in the noise blanker circuit. The noise amplified by Q8, Q9 and Q10 is rectified by D13 and D14 and applied to the base of Q6, and then applied to Q8, Q9 and Q10 as AGC voltage. AGC time constant circuit Q6 is designed to be inoperative against pulse noise, but operative against continuous signal having short period such as SSB. Thus, Q8, Q9 and Q10 are operated nearly in maximum gain state, and against continuous signals they are operated in the condition that gain is suppressed by AGC voltage. Now, assume that Q11 is turned ON by pulse noise when the NB switch is turned ON. The collector voltage of Q11 is reduced suddenly and D1 through D4 connected to the collector of Q11 are reversely biased for a specified time by the time constant circuit consisting of C8 and R2, thus placing the signal line to OFF state. That is, the pulse noise is then eliminated (such as ignition noise of automobiles) D15 is a diode for setting the switching level.

This NB circuit is incorporated in IF unit.

## AUX BAND

AUX position in BAND switch is empty channel because of circuit configuration.

# PARTS ALIGNMENT

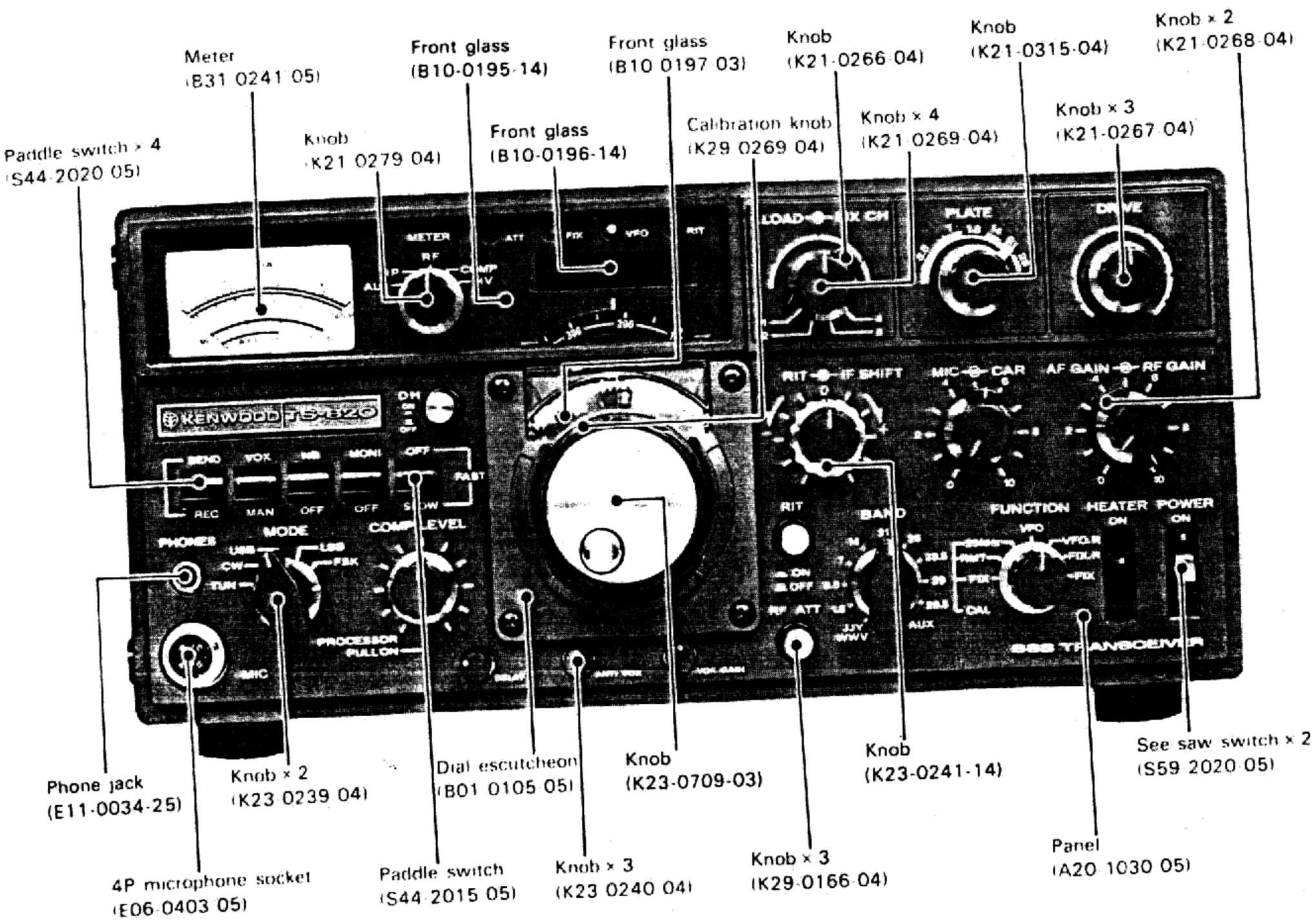


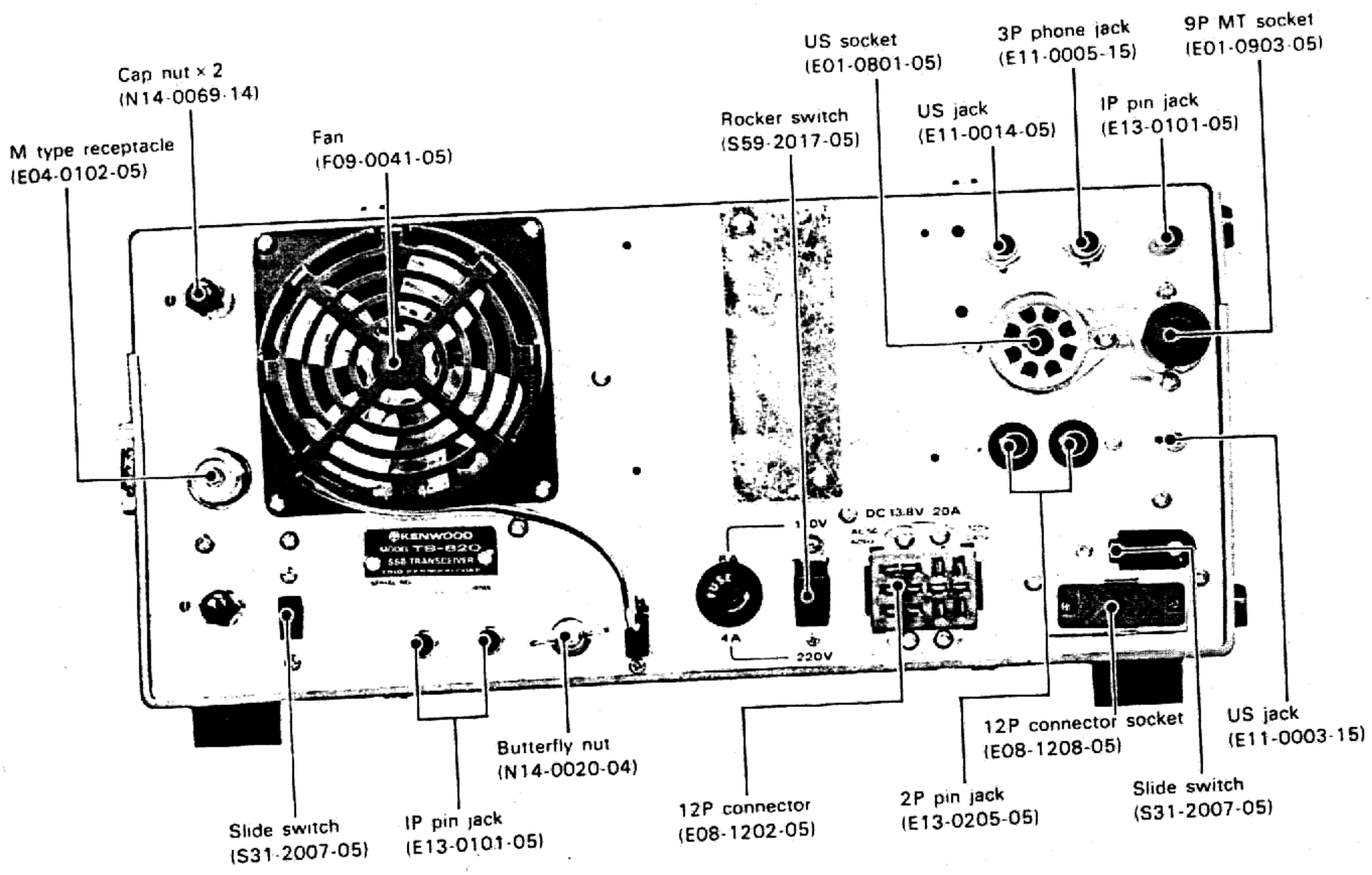

# PARTS ALIGNMENT

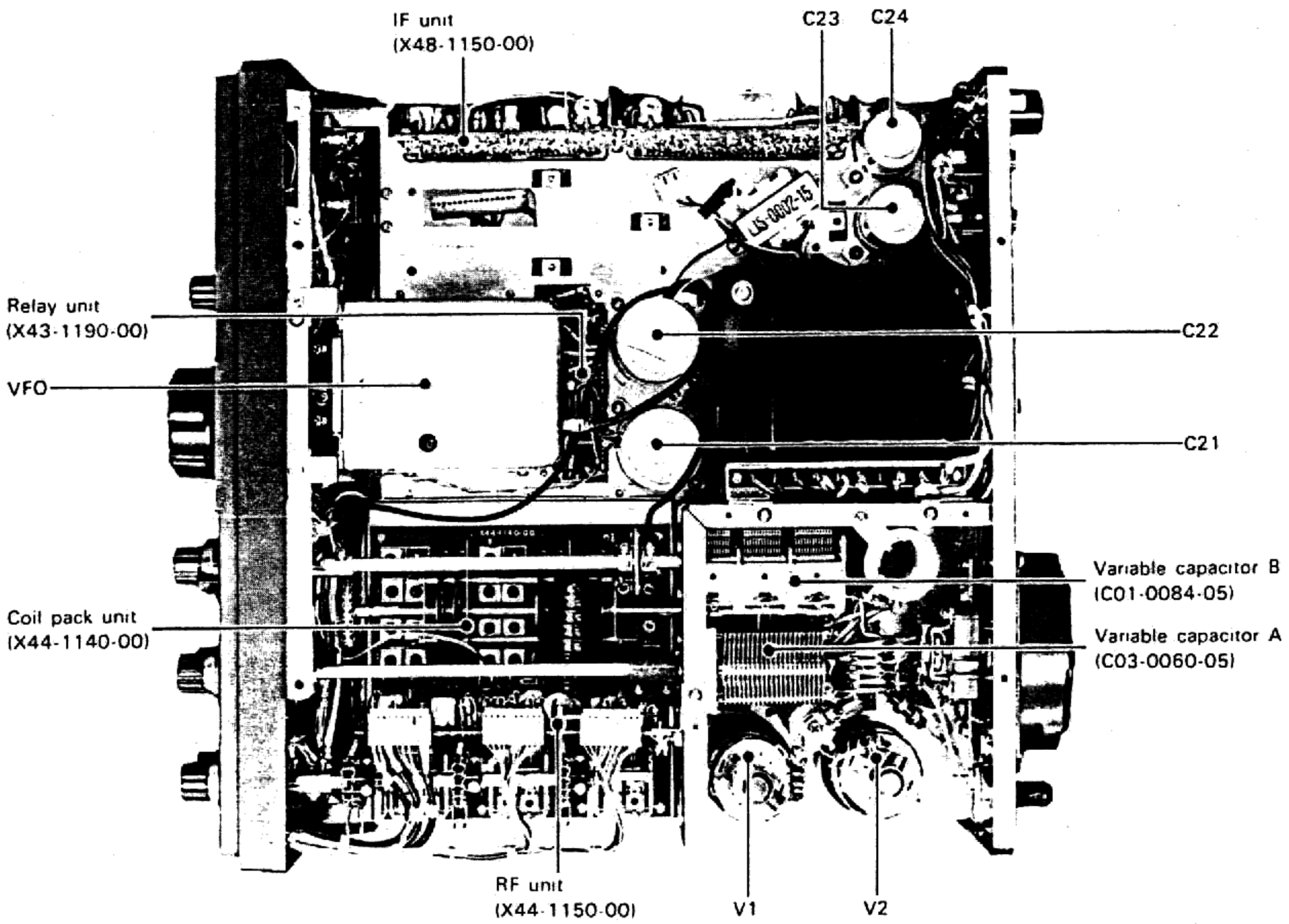


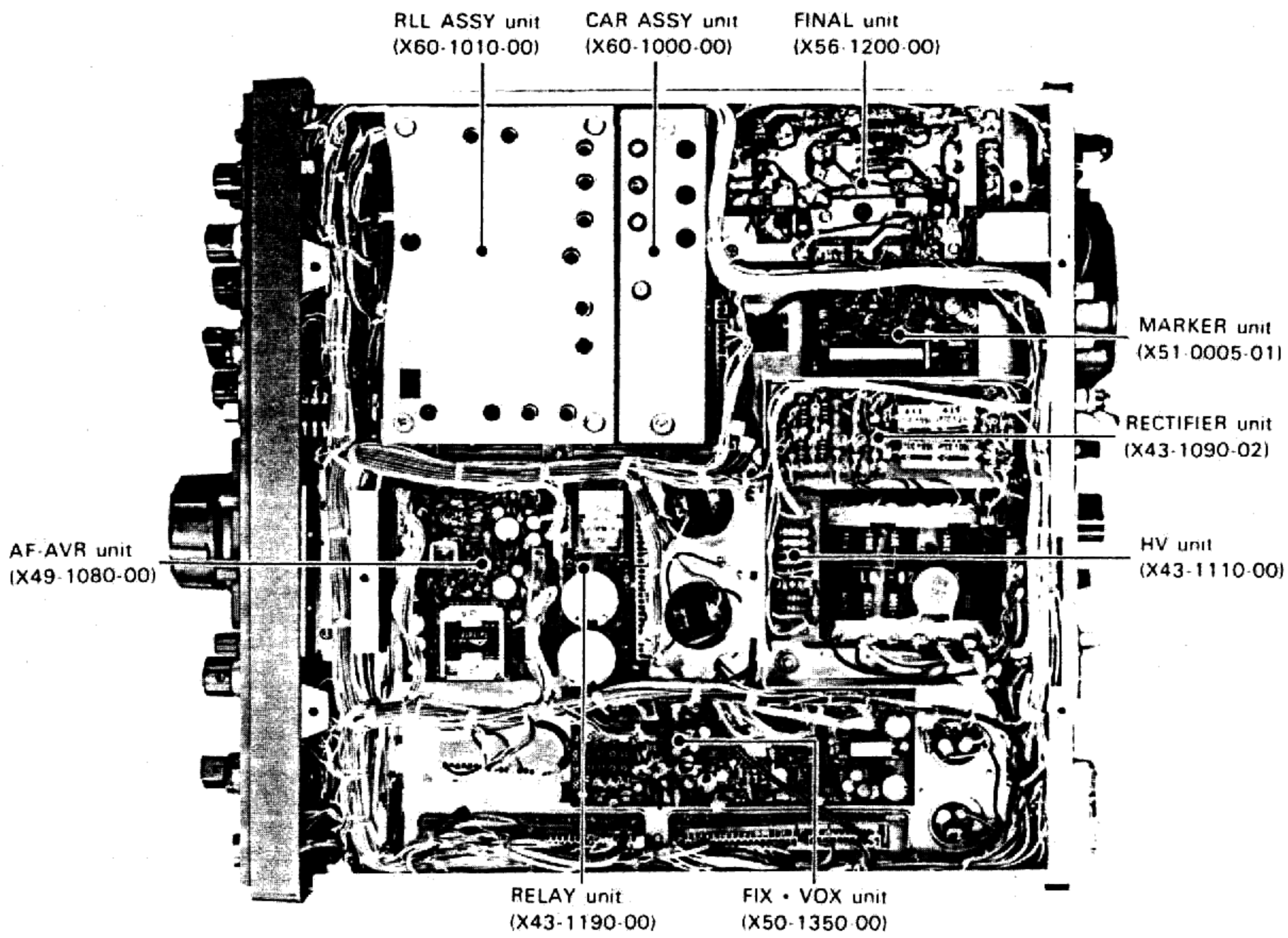

# PARTS ALIGNMENT

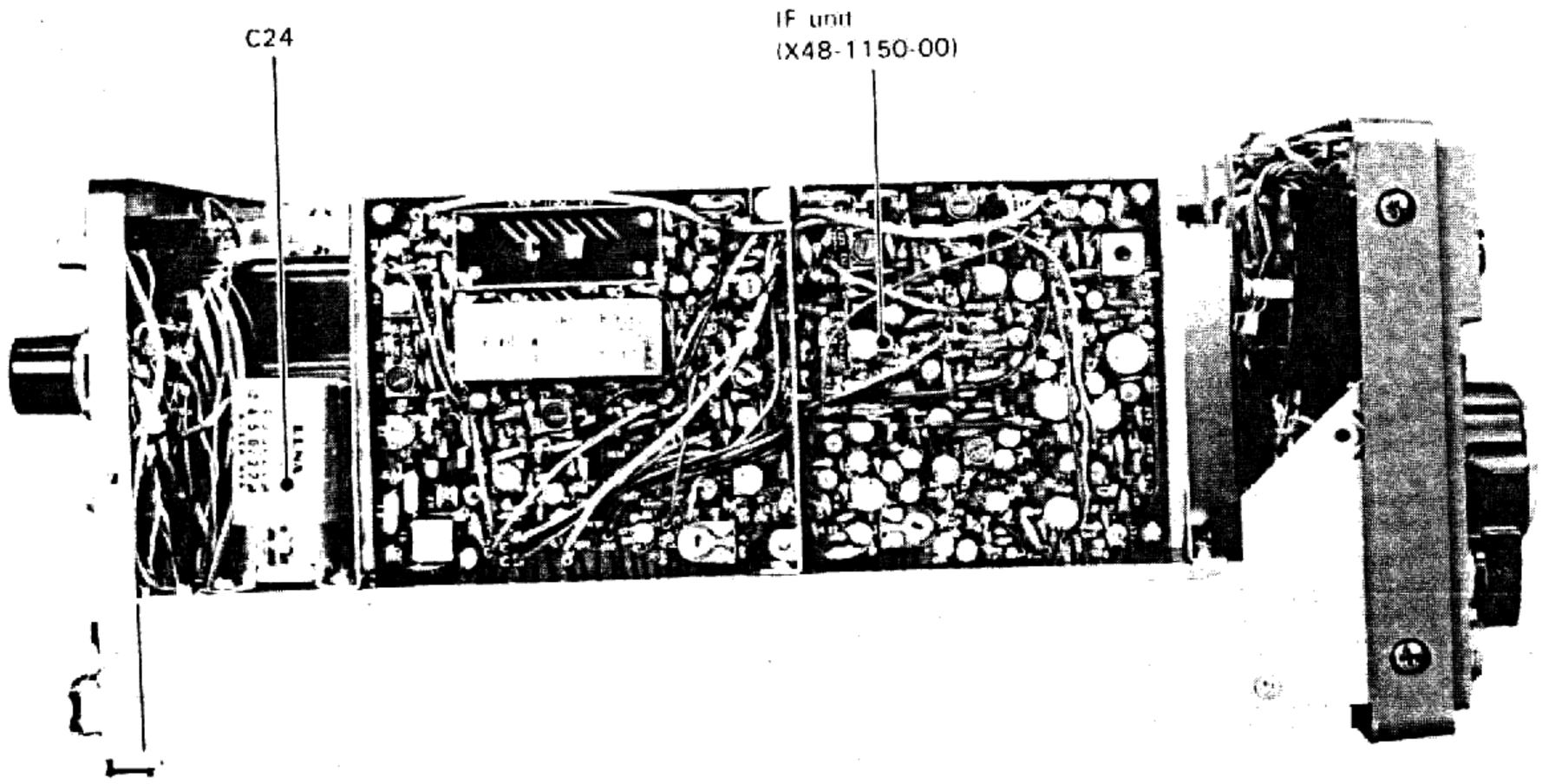


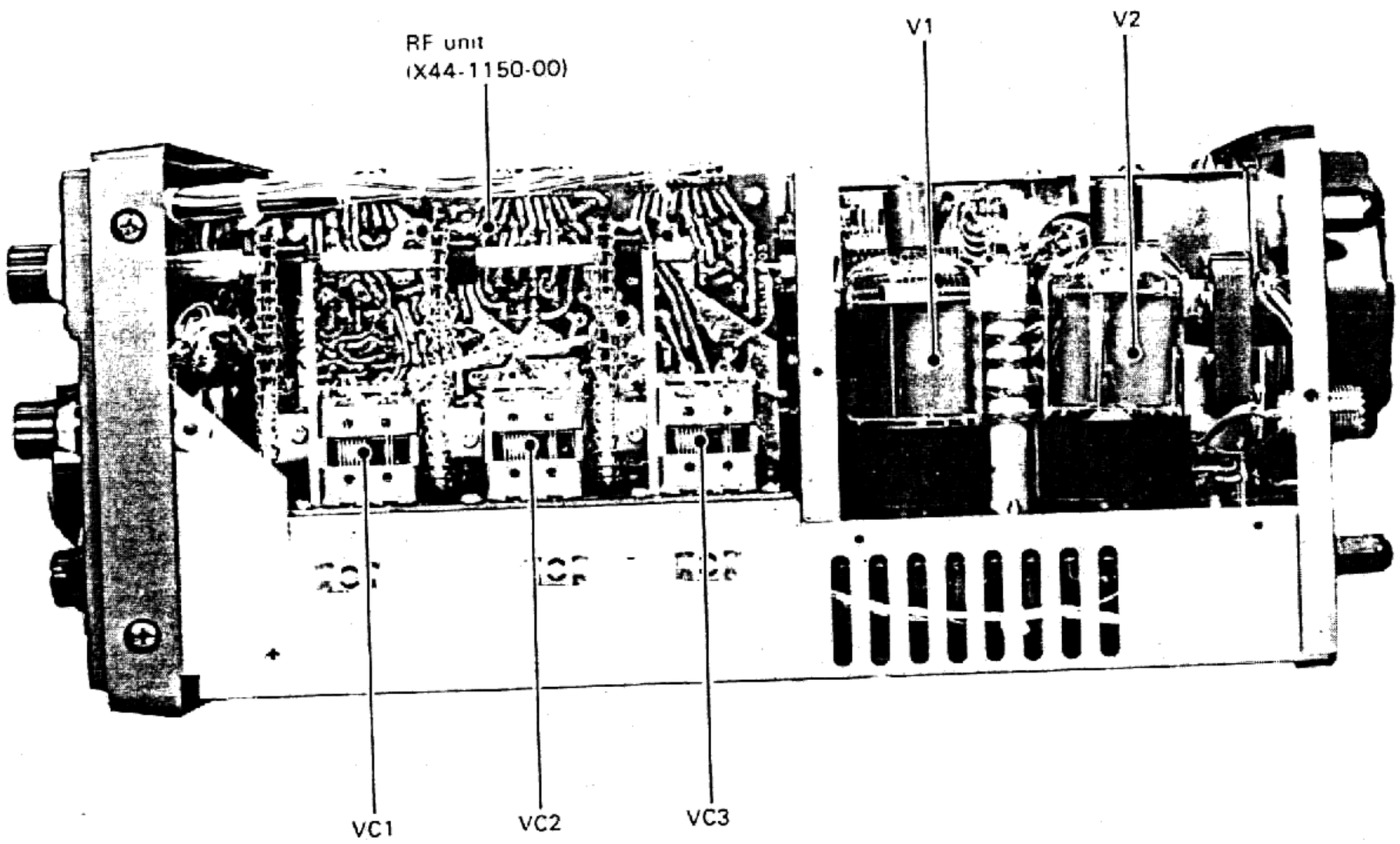

# PACKING

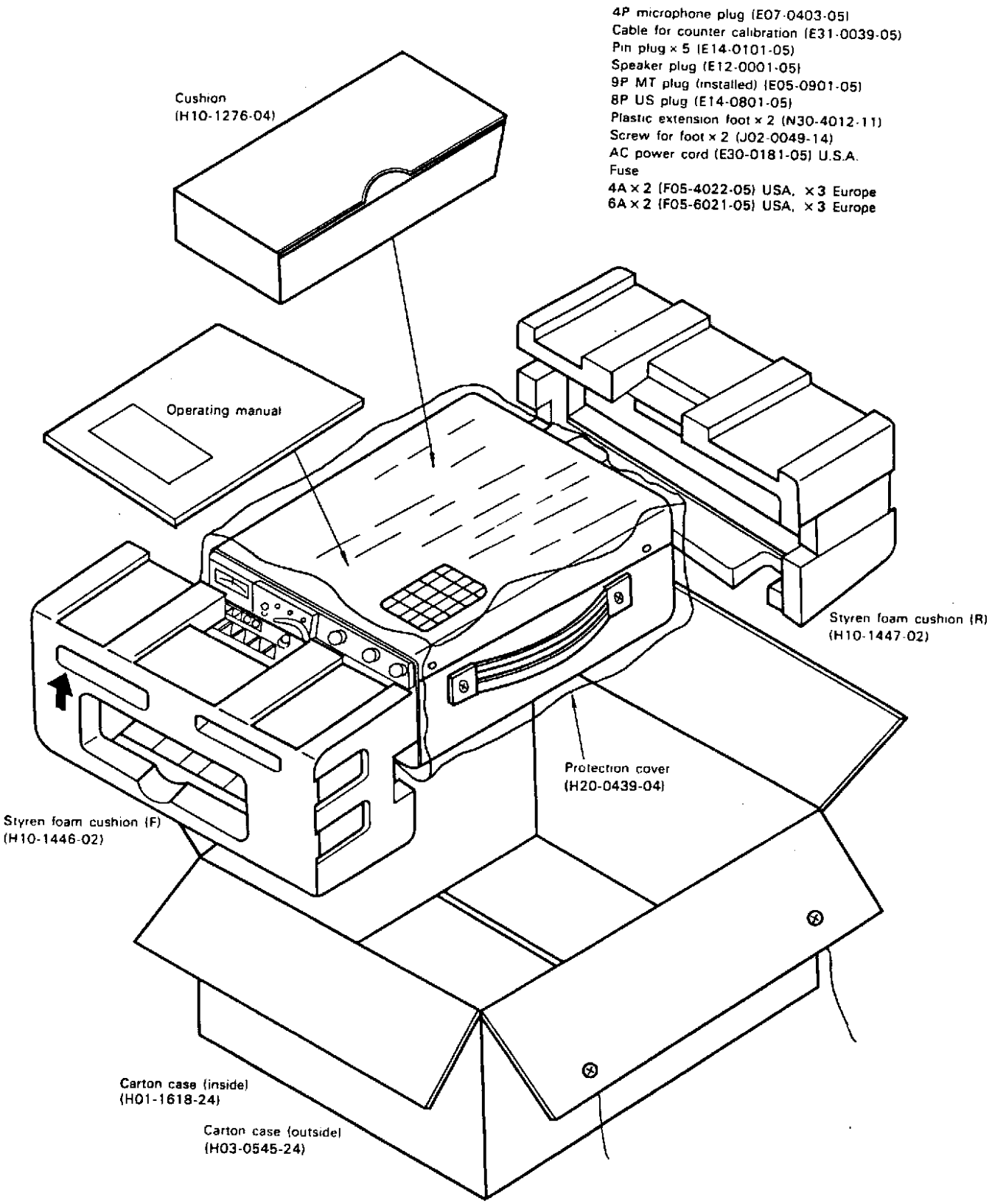
4P microphone plug (E07-0403-05)
Cable for counter calibration (E31-0039-05)
Pin plug × 5 (E14-0101-05)
Speaker plug (E12-0001-05)
9P MT plug (installed) (E05-0901-05)
8P US plug (E14-0801-05)
Plastic extension foot × 2 (N30-4012-11)
Screw for foot × 2 (J02-0049-14)
AC power cord (E30-0181-05) U.S.A.
Fuse
4A × 2 (F05-4022-05) USA, ×3 Europe
6A × 2 (F05-6021-05) USA, ×3 Europe
Cushion
(H10-1276-04)
Operating manual
Styren foam cushion (R)
(H10-1447-02)
Protection cover
(H20-0439-04)
Styren foam cushion (F)
(H10-1446-02)
Carton case (inside)
(H01-1618-24)
Carton case (outside)
(H03-0545-24)

# PARTS LIST

| Ref No | Parts No. | Description | Remarks |
|---|---|---|---|
| | | **CAPACITOR** | |
| C1 | C90 0186 05 | Ceramic 0 001μF 3kWV | |
| C2 | C90 0187 05 | Ceramic 0 0047μF 1 4kWV | |
| C3 | C90 0185 05 | Ceramic 100pF 3kWV | |
| C4 | C91 0017-05 | Ceramic 390pF | |
| C5 | C91 0016-05 | Ceramic 3pF 3kWV | |
| C6 | CC45SL2H821J | Ceramic 820pF ±5% | |
| C7 | CC45SL2H102J | Ceramic 0 001μF ±5% | |
| C8 | CC45SL2H681J | Ceramic 680pF ±5% | |
| C9 | CC45SL2H271J | Ceramic 270pF ±5% | |
| C10 | CC45SL2H101J | Ceramic 100pF ±5% | |
| C11 | C90 0187-05 | Ceramic 0 0047μF 1 4kWV | |
| C12.13 | C90-0300-05 | Ceramic 470pF AC150WV | |
| C14～17 | CK45F1H103Z | Ceramic 0.01μF +80%−20% | |
| C18～20 | CK45E2H103P | Ceramic 0 001μF +100%−0% | |
| C21 | C90 0327-05 | Electrolytic 100μF 500WV | |
| C22 | C90-0327 05 | Electrolytic 100μF 500WV | |
| C23.24 | C90-0326 05 | Electrolytic 22μF 450WV | |
| C25 | CC45CH2H470J | Ceramic 47pF ±5% | |
| C26 | CC45SL2H221J | Ceramic 220pF 500WV | |
| C27 | CK45F1H103Z | Ceramic 0.01μF +80%−20% | |
| C28 | CK45D1H102M | Ceramic 0.001μF ±20% | |
| C29.30 | CK45F1H103Z | Ceramic 0.001μF +80%−20% | |
| C31 | C90-0172-05 | Ceramic 12pF 3kV | |
| C32～34 | CK45F1H103Z | 0.01μF +80%−20% | |
| | | **RESISITOR** | |
| R1 | RD14BY2E102J | Carbon 1kΩ ±5% 1/4W | |
| R2 | RD14BY2E332J | Carbon 3.3kΩ ±5% 1/4W | |
| R3.4 | RC05GF2H101J | Carbon 100Ω ±5% 1/4W | |
| R5～7 | RC05GF2H474J | Carbon 470kΩ ±5% 1/2W | |
| R8 | RC05GF3A103K | Carbon 10kΩ ±10% 1W | |
| R9 | PD14BY2B560J | Carbon 56Ω ±5% 1/8W | |
| R10 | PD14BY2B471J | Carbon 470Ω ±5% 1/8W | |
| R11 | PD14BY2E182J | Carbon 1.8kΩ ±5% 1/4W | |
| R12 | PD14BY2E221J | Carbon 220Ω ±5% 1/4W | |
| R13 | PD14BY2E681J | Carbon 680Ω ±5% 1/4W | |
| R14 | PD14BY2E102J | Carbon 1kΩ ±5% 1/4W | |
| | | **SEMICONDUCTOR/TUBE** | |
| D1 | V11-0051-05 | Diode IN60 | |
| D2 | V11-0285-05 | Diode V06E | |
| V1.2 | V40-0150-00 | Final tube S2001A | |
| | | **POTENTIOMETER** | |
| VR1 | R01 3028-05 | 10kΩ (C), RF-PRO with switch (S10) | |
| VR2.3 | R03-3050-05 | 10kΩ (B), RF-VOLT. BIAS | |
| VR4.5 | R08-3012-15 | 10kΩ (A), AF, 10kΩ (B) RF-GAIN<br>10kΩ (A) MIC, 10kΩ (B) CAR | |
| VR6 | R08-9011-05 | 5kΩ (B) RIT, 10kΩ (F) IF-SHIFT | |
| | | **SWITCH** | |
| S1 | S01-1037-05 | Rotary switch METER SW | |
| S2 | S01-1038-05 | Rotary switch FIX CH | |
| S3 | S01-1039-05 | Rotary switch BAND SW | |
| S4 | S01-3022-15 | Rotary switch FINAL | |
| S5 | S01-4017-05 | Rotary switch FUNCTION | |
| S6 | S01-5010-05 | Rotary switch MODE | |
| S7～9 | S40-2077-05 | Push switch RIT, ATT, DH | |
| S11～14 | S44-2020-05 | Paddle switch STBY, VOX, NB, MON | |
| S15 | S44-2015 05 | Paddle switch AGC | |
| S16.17 | S59-2020-05 | See-saw switch POWER, HEATER | |
| S18.19 | S31-2007-05 | Slide switch SG, XVTR | |
| S21 | S59-2017-05 | Rocker switch (Power source selectior | |

| Ref No. | Parts No. | Description | Remarks |
|---|---|---|---|
| | | **COIL/TRIMMER/VARIABLE CAPACITOR** | |
| L1 | L33 0032-05 | Choke coil . 3μH | |
| L3 | L33-0218-15 | Choke coil (Final) | |
| L4 | L33-0259-05 | Choke coil, 470μH (for safety) | |
| L5 | L34-0560-05 | Final coil (A) | |
| L6 | L34-0561-05 | Final coil (B) (28 MHz) | |
| L7 | L40-1511-03 | Ferri-inductor, 150μH | |
| TC1 | C03-0002-05 | Trimmer (Neutralizing) | |
| VC1 | C03-0060-05 | Variable capacitor (A) (Final) | |
| VC2 | C01 0084-05 | Variable capacitor (B) (Loard) | |
| PS1 2 | L39-0046-05 | Coil (Parastic suppressor) | |
| | | **MISCELLANEOUS** | |
| — | A01-0274-05 | Casing | |
| — | A01-0283-22 | Case | |
| — | A10-0488-11 | Chassis | |
| — | A20-1030-05 | Panel | |
| — | A22-0195-32 | Sub-panel | |
| — | A23-0649-12 | Rear panel | |
| — | A40-0151-21 | Bottom plate | |
| — | B01-0105-05 | Dial escutcheon | |
| — | B05-0201-04 | Speaker grille cloth | |
| — | B09-0003-05 | Coupling × 2 (Baklite) | |
| — | B09-0011-04 | Rubber cap × 3 (Opening for adjustment) | |
| — | B10-0195-14 | Front glass | |
| — | B10-0196-14 | Front glass (Indicating plate) | |
| — | B10-0197-03 | Front glass (Main dial) | |
| — | B20-0373-04 | Dial scale (Sub-dial) | |
| — | B20-0374-04 | Dial scale (A) (Out side) | |
| — | B20-0375-04 | Dial scale (B) (Inside) | |
| — | B21-0007-04 | Pointer (PLATE knob) | |
| — | B30-0079-05 | Pilot lamp × 3 12V, 40 mA | |
| — | B31-0241-05 | Meter | |
| — | B40-1429-04 | Model name plate (KENWOOD) | |
| — | B41-0222-24 | Voltage indication sticker 120/220V | |
| — | B42-0287-14 | Caution sticker (high voltage) | |
| — | B42-0628-04 | Fixed ch. sticker | |
| — | B42-0452-04 | DC terminal indicating sticker | |
| — | B43-0261-04 | Badge (TS-820) | |
| — | B46-0058-00 | Warranty card | U.S.A. |
| — | B50-2529-00 | Operating manual | |
| — | B58-0181-00 | Caution card (Transmitter section) | |
| — | B58-0187-00 | Caution card (Source voltage) | Europe |
| — | B58-0188-00 | Caution sticker (Source voltage) | |
| — | D13-0055-04 | Sprocket × 2 | |
| — | D16-0058-04 | Chain ass'y | |
| — | D21-0326-24 | Shaft (A) (LOAD) | |
| — | D21-0413-05 | Band shaft | |
| — | D21-0414-24 | Shaft (B) (DRIVE) | |
| — | D21-0415-14 | Shaft (C) (PLATE) | |
| — | D22-0004-04 | Shaft coupling (6φ−6φ) | |
| — | D22-0027-14 | Shaft joint (6φ−3φ) | |
| — | D22-0401-04 | Shaft coupling (DRIVE) | |
| — | D23-0702-05 | Ball retainer | |
| — | D32-0051-04 | Shaft stopper (3 × 10) | |
| — | D32-0064-04 | Shaft stopper × 2 | |
| — | D32-0075-04 | Switch stopper | |
| — | D40-0204-04 | Vernier mechanism ass'y | |
| — | D40-0206-05 | Fan ass'y | |
| — | E01-0801-05 | US socket | |
| — | E01-0903-05 | 9PMT socket | |
| — | E03-0301-15 | 3P plug (Power source) | Europe |

# PARTS LIST

| Ref. No | Parts No | Description | Remarks |
|---|---|---|---|
| – | E04-0102-05 | M type receptacle | |
| – | E05-0901-05 | 9PMT plug | |
| – | E06-0403-05 | 4P Miceophone socket | |
| – | E07-0403-05 | 4P Microphone jack | |
| – | E08-0204-05 | 2P plug socket × 2 | |
| – | E08-1202-05 | 12P plug socket | |
| – | E08-1207-05 | 12P plug | |
| – | E08-1208-05 | Connector socket (for transverter) | |
| – | E09-0204-05 | 2P plug socket × 3 | |
| – | E11-0003-15 | US jack (External speaker) | |
| – | E11-0005-15 | 3P phone jack (Key) | |
| – | E11-0014-05 | US jack (RTTY) | |
| – | E11-0034-25 | US jack (2P with SW) | |
| – | E12-0001-05 | Phone plug (SP) | |
| – | E13-0101-05 | 1P jack × 3 | |
| – | E13-0205-05 | 2P jack | |
| – | E14-0101-05 | 1P plug × 6 | |
| – | E14-0801-05 | US plug | |
| – | E20-0512-05 | 5P terminal plate | |
| – | E20-1003-05 | 10P terminal plate | |
| – | E22-0207-05 | Lug plate | |
| – | E23-0014-04 | Acme terminal | |
| – | E23-0056-05 | Terminal | |
| – | E23-0093-05 | Teminal (mini connector) | |
| – | E30-0181-05 | AC power cord | U.S.A. |
| – | E31-0037-05 | 3P connector with lead (FSK switching) | |
| – | E31-0038-05 | 3P connector with coaxial cable | |
| – | E31-0039-05 | Counter cable | |
| – | E33-0084-00 | Wire kit | U.S.A. |
| – | E33-0085-00 | Wire kit | Europe |
| – | E33-0097-00 | Wire kit | U.S.A. |
| – | E33-0098-00 | Wire kit | Europe |
| – | E90-0004-15 | Plate cap × 2 | |
| – | F05-4022-05 | Fuse (4A) × 2 | U.S.A. |
| | | Fuse (4A) × 3 | Europe |
| – | F05-6021-05 | Fuse (6A) × 2 | U.S.A. |
| | | Fuse (6A) × 3 | Europe |
| – | F09-0041-05 | Fan | |
| – | F10-0402-04 | Shield plate (Relay) | |
| – | F10-0412-14 | Shield plate (Final) | |
| – | F11-0243-23 | Final box | |
| – | F11-0244-03 | Final cover | |
| – | F15-0205-04 | Shading plate | |
| – | F15-0601-04 | Shading plate (small) × 2 | |
| – | F19-0133-14 | Protecting plate (for DC-DC converter) | |
| – | G01-0801-04 | Spring (for earth) | |
| – | G11-0008-04 | Cushion (Relay) | |
| – | G11-0053-04 | Cushion | |
| – | H01-1608-24 | Carton case (Inside) | |
| – | H03-0545-24 | Carton case (Outside) | Europe |
| – | H03-1603-14 | Carton case (Outside) | U.S.A. |
| – | H10-1276-04 | Cushion | |
| – | H10-1446-02 | Styrene foam cushion (F) | |
| – | H10-1447-02 | Styrene foam cushion (R) | |
| – | H20-0439-04 | Protection cover | |
| – | H25-0029-04 | Polyetylene bag | |
| – | H25-0120-04 | Polyetylene bag | |
| – | J02-0022-05 | Leg (Small) × 4 | |
| – | J02-0049-14 | Leg (Large) × 6 | |
| – | J13-0033-15 | Fuse holder | |
| – | J19-0006-04 | Switch stopper | |
| – | J19-1301-04 | Diode holder × 4 | |
| | J21-0392-04 | Lead holder | |
| – | J21-0934-15 | Fitting for handle × 2 | |

| Ref. No. | Parts No. | Description | Remarks |
|---|---|---|---|
| – | J21-1144-04 | Speaker retainer | |
| – | J21-1148-04 | Variable capacitor stopper | |
| – | J21-1151-04 | Terminal plate stopper | |
| – | J21-1202-04 | Speaker retainer ass'y | |
| – | J21-1425-04 | Retainer | |
| – | J21-1494-04 | Meter stopper | |
| – | J21-1495-04 | Lamp stopper | |
| – | J21-1496-04 | Rotary switch stopper | |
| – | J21-1497-04 | Final coil stopper × 2 | |
| – | J21-1502-04 | RF PC board stopper | |
| – | J21-2556-04 | VFO fittings | |
| – | J21-1504-14 | Shaft holder × 2 | |
| – | J31-0141-04 | Ring spacer (Microphone) | |
| – | J32-0074-04 | Hexagonal boss (AF) × 4 | |
| – | J32-0218-04 | Hexagonal boxx × 8 (Push switch) | |
| – | J32-0220-04 | Hexagonal boss × 2 (Final) | |
| – | J32-0222-04 | Boss for dial scale (A) | |
| – | J32-0223-14 | Boss for dial scale (B) | |
| – | J32-1030-14 | Round boss | |
| – | J41-0020-04 | Knob bushing × 3 | |
| – | J41-0024-15 | Cord bushing | |
| – | J61-0006-04 | Free up belt | Europe |
| – | J61-0019-05 | Vinyl tie × 12 | |
| – | K01-0049-15 | Handle | |
| – | K21-0266-04 | Knob FIX. CH | |
| – | K21-0267-04 | Knob × 3 DRIVE. FUNCTION. COMP LEVEL | |
| – | K21-0268-04 | Knob × 2 CAR. RF GAIN | |
| – | K21-0269-04 | Knob × 4 LOAD. RIT. MIC. AF GAIN | |
| – | K21-0279-04 | Knob METER | |
| – | K21-0315-04 | Knob PLATE | |
| – | K21-0709-03 | Knob MAIN | |
| – | K23-0239-04 | Knob BAND. MODE | |
| – | K23-0240-04 | Knob VOX. ANTI VOX. DELAY | |
| – | K23-0241-14 | Knob IF SHIFT | |
| – | K29-0166-04 | Knob (Push) × 3 DH. RF ATT. RIT | |
| – | K29-0269-04 | Knob (Calibration) | |
| – | L01-1056-05 | Power transformer | |
| – | L15-0002-15 | Choke coil (Low frequency) | |
| – | S51-4017-15 | ANT relay | |
| – | T03-0027-15 | Speaker | |
| – | T40-0022-05 | Motor | |
| – | X40-1110-00 | VFO unit | |
| – | X43-1090-02 | Rectifier unit | |
| – | X43-1110-00 | HV unit | |
| – | X43-1190-00 | Relay unit | |
| – | X44-1140-00 | Coil-pack unit | |
| – | X44-1150-00 | RF unit | |
| – | X48-1150-00 | IF unit | |
| – | X49-1080-00 | AF-AVR unit | |
| – | X50-1350-00 | FIX-VOX | |
| – | X52-0005-01 | Marker unit | |
| – | X54-1180-00 | Indicator unit | |
| – | X54-1190-00 | VOX-VR unit | |
| – | X56-1200-00 | FINAL unit | |
| – | X60-1000-00 | CAR ass'y unit | |
| – | X60-1010-00 | PLL ass'y unit | |

# PARTS LIST

## VFO (X40-1110-00)

| Ref No | Parts No. | Description | Remarks |
|---|---|---|---|
| | | **CAPACITOR** | |
| C1 | CC45PG1H470J | Ceramic 47pF ±5% | |
| C2,3 | CC45LG1H150J | Ceramic 15pF ±5% | |
| C4 | CC45SG1H070J | Ceramic 7pF ±5% | |
| C5 | CC45LG1H470J | Ceramic 47pF ±5% | |
| C6 | CC45LG1H220J | Ceramic 22pF ±5% | |
| C7,8 | CM93F2A151J | Mica 150pF ±5% | |
| C9 | CC45CH1H030D | Ceramic 3pF ±0.5pF | |
| C10 | CK45F1H223Z | Ceramic 0.022μF +80%−20% | |
| C11,12 | CK45F1H473Z | Ceramic 0.047μF +80%−20% | |
| C13 | CK45F1H223Z | Ceramic 0.022μF +80%−20% | |
| C14 | CC45SL1H330J | Ceramic 33pF ±5% | |
| C15 | CC45SL1H050D | Ceramic 5pF ±0.5pF | |
| C16 | CC45SL1H100D | Ceramic 10pF ±0.5pF | |
| C17 | CC45SL1H050D | Ceramic 5pF ±0.5pF | |
| C18 | CK45F1H103Z | Ceramic 0.01μF +80%−20% | |
| C19 | CK45F1H473Z | Ceramic 0.047μF +80%−20% | |
| C20 | CC45CG1H100D | Ceramic 10pF ±0.5pF | |
| | | **RESISTOR** | |
| R1 | PD14BY2E105J | Carbon 1MΩ ±5% 1/4W | |
| R2 | PD14BY2E101J | Carbon 100Ω ±5% 1/4W | |
| R3,4 | PD14BY2E105J | Carbon 1MΩ ±5% 1/4W | |
| R5 | PD14BY2E331J | Carbon 330Ω ±5% 1/4W | |
| R6 | PD14BY2E333J | Carbon 33kΩ ±5% 1/4W | |
| R7 | PD14BY2E473J | Carbon 47kΩ ±5% 1/4W | |
| R8 | PD14BY2E102J | Carbon 1kΩ ±5% 1/4W | |
| R9 | PD14BY2E101J | Carbon 100Ω ±5% 1/4W | |
| | | **SEMICONDUCTOR** | |
| Q1 | V09-0020-05 | FET 3SK22(Y) | |
| Q2 | V09-0011-05 | FET 2SK19(Y) | |
| Q3,4 | V03-0079-05 | FET 2SC460(B) | |
| D1 | V11-0053-05 | Diode SD111 | |
| D2,3 | V11-0051-05 | Diode IN60 | |
| | | **COIL/VC/TRIMMER** | |
| L1 | L32-0098-05 | Oscillator coil | |
| L2～4 | L40-1021-03 | Ferri inductor 1 mH | |
| L5 | L40-2201-03 | Ferri inductor 22μH | |
| L6,7 | L40-1021-03 | Ferri inductor 1 mH | |
| TC1 | C03-0001-05 | Variable capacitor (Small size) | |
| TC2 | C05-0013-15 | Ceramic trimmer | |
| | | **MISCELLANEOUS** | |
| — | A01-0169-23 | VFO Case | |
| — | B42-0010-04 | Indication tape | |
| — | C01-0169-05 | Variable capacitor | |
| — | D22-0011-05 | Shaft coupling | |
| — | D40-0205-05 | Dial mechanism | |
| — | E08-0204-05 | 2P plug socket | |
| — | E13-0101-05 | 1P pin jack | |
| — | E22-0207-05 | Lug plate | |
| — | E23-0021-04 | Terminal × 5 | |
| — | F07-0231-34 | VFOcover | |
| — | F10-0249-14 | VFO shield plate | |
| — | F11-0010-04 | VFO box | |
| — | G03-0009-04 | Spring | |

| Ref. No. | Parts No | Description | Remarks |
|---|---|---|---|
| — | J21-0895-03 | VFO variable capacitor stopper | |
| — | J25-1505-13 | VFO stopper | |

## HV (X43-1110-00)

| Ref No | Parts No | Description | Remarks |
|---|---|---|---|
| | | **CAPACITOR** | |
| C1 | CK45E2H103P | Ceramic 0.01μF +100%−0% | |
| | | **RESISTOR** | |
| R1 | RC05GF2H104J | Carbon 100kΩ ±5% 1/2W | |
| R2～4 | PD14BY2H684J | Carbon 680kΩ ±5% 1/2W | |
| R5,6 | RC05GF2H563J | Carbon 56kΩ ±5% 1/2W | |
| R7 | RC05GF2H123J | Carbon 12kΩ ±5% 1/2W | |
| | | **MISCELLANEOUS** | |
| | E23-0047-04 | Terminal (square) × 6 | |

## RELAY (X43-1190-00)

| Ref No | Parts No | Description | Remarks |
|---|---|---|---|
| | | **CAPACITOR** | |
| C1,2 | C90-0325-05 | Electrolytic 2200μF 25WV | |
| C3 | CK45F1H473Z | Ceramic 0.04μF +80%−20% | |
| C4,5 | CK45F1H103Z | Ceramic 0.01μF +80%−20% | |
| C6 | CQ92M1H104K | Mylar 0.1μF ±10% | |
| | | **RESISTOR** | |
| R1 | RS14AB3D221J | Metal film 220Ω ±5% 2W | |
| | | **SEMICONDUCTOR** | |
| D1 | V11-0418-05 | Zener diode BZ-052 | |
| | | **MISCELLANEOUS** | |
| RL | S51-4031-05 | Relay | |
| RL1,2 | E40-1413-05 | Mini connector | |
| RL3 | E40-0613-05 | Mini connector | |

## RECTIFIER (X43-1090-02)

| Ref No | Parts No | Description | Remarks |
|---|---|---|---|
| | | **CAPACITOR** | |
| C1,2 | CE02W2C330 | Electrolytic 33μF 160WV | |
| C3,4 | CK45E2H103P | Ceramic 0.01μF +100%−0% | |
| | | **RESISTOR** | |
| R1～4 | RC05GF2H474J | Carbon 410kΩ ±5% 1/2W | |
| R5,6 | RS14AB3D471J | Metal film 470Ω ±5% 2W | |
| R7 | RC05GF2H102J | Carbon 1kΩ ±5% 1/2W | |
| R8 | RC05GF2H104J | Carbon 100kΩ ±5% 1/2W | |
| R9,10 | PD14CY2E104J | Carbon 100kΩ ±5% 1/4W | |
| | | **SEMICONDUCTOR** | |
| D1～6 | V11-0282-05 | Diode V08J | |
| D7 | V11-0285-05 | Diode V06E | |
| D8～11 | V11-0290-05 | Diode V03C | |
| | | **MISCELLANEOUS** | |
| | E23-0047-04 | Terminal (square) × 17 | |

# PARTS LIST

## COIL PACK (X44-1140-00)

| Ref No | Parts No | Description | | | | Re-marks |
|---|---|---|---|---|---|---|
| | | **CAPACITOR** | | | | |
| C1 2 | CC45RH1H560J | Ceramic | 56pF | ±5% | | |
| C3 | CC45RH1H470J | Ceramic | 47pF | ±5% | | |
| C4 | CC45RH1H560J | Ceramic | 56pF | ±5% | | |
| C5 | CC45RH1H470J | Ceramic | 47pF | ±5% | | |
| C6 | CC45RH2H560J | Ceramic | 56pF | ±5% | | |
| C7 | CC45RH2H390J | Ceramic | 39pF | ±5% | | |
| C8 | CC45RH2H330J | Ceramic | 33pF | ±5% | | |
| C9 | CC45RH1H151JTD | Ceramic | 150pF | ±5% | | |
| C10 | CC45RH1H101JTD | Ceramic | 100pF | ±5% | | |
| C11 | CC45SL1H561JTD | Ceramic | 560pF | ±5% | | |
| C12.13 | CK45F1H103Z | Ceramic | 0 01μF | +80% −20% | | |
| C14 | CC45RH1H220J | Ceramic | 22pF | ±5% | | |
| C15 | CC45RH1H221JTD | Ceramic | 220pF | ±5% | | |
| C16 | CC45RH1H101JTD | Ceramic | 100pF | ±5% | | |
| C17 | CC45SL1H561JTD | Ceramic | 560pF | ±5% | | |
| C18 | CC45RH1H330J | Ceramic | 33pF | ±5% | | |
| C19 | CC45RH1H390J | Ceramic | 39pF | ±5% | | |
| C20 | CQ92M1H102J | Ceramic | 0.001μF | ±5% | | |
| C21 | CC45RH1H101JTD | Ceramic | 100pF | ±5% | | |
| C22 23 | CC45RH2H121JTD | Ceramic | 120pF | ±5% | | |
| C24 | CC45RH2H330J | Ceramic | 33pF | ±5% | | |
| C25 | CC45SL1H561JTD | Ceramic | 560pF | ±5% | | |
| C26 27 | CK45E2H103P | Ceramic | 0.01μF | +100% −0% | | |
| C28 | CC45SL1H100D | Ceramic | 10pF | +0 5pF | | |
| C29 30 | CK24E2H103P | Ceramic | 0 01μF | +100% −0% | | |
| C32 | CC45RH1H330J | Ceramic | 33pF | ±5% | | |
| C33 | CK45F1H103Z | Ceramic | 0.01μF | +80% −20% | | |
| C34 | CC45RH1H390J | Ceramic | 39pF | ±5% | | |
| C35 | CC45RH1H390J | Ceramic | 39pF | ±5% | | |
| C36 | CC45HH1H390J | Ceramic | 39pF | ±5% | | |
| C37 | CC45RH1H390J | Ceramic | 39pF | ±5% | | |
| C38 | CC45RH2H390J | Ceramic | 39pF | ±5% | | |
| C39 | CC45RH1H050D | Ceramic | 5pF | ±5% | | |
| | | **RESISTOR** | | | | |
| R1 | PD14CY12E103J | Carbon | 10kΩ | ±5% | 1/4W | |
| R2 | PD14CY2E102J | Carbon | 1kΩ | ±5% | 1/4W | |
| R3 | PD14CY2E223J | Carbon | 22kΩ | ±5% | 1/4W | |
| R4 | PD14CY2E102J | Carbon | 1kΩ | ±5% | 1/4W | |
| R5 | PD14CY2E820J | Carbon | 82Ω | ±5% | 1/4W | |
| R6,7 | PD14CY2E472J | Carbon | 4.7kΩ | ±5% | 1/4W | |
| R8 | PD14CY12E392J | Carbon | 3.9kΩ | ±5% | 1/4W | |
| | | **COIL VC** | | | | |
| L1 | L34-0545-05 | Tuning coil | WWV | | MIX | |
| L2 | L34-0548-05 | Tuning coil | 1 9 | | MIX | |
| L3 | L34 0549-05 | Tuning coil | 3 5 | | MIX | |
| L4 | L34-0550-05 | Tuning coil | 7 | | MIX | |
| L5 | L34-0545-05 | Tuning coil | 14 | | MIX | |
| L6 | L34-0546-15 | Tuning coil | 21 | | MIX | |
| L7 | L34-0547-15 | Tuning coil | 28 | | MIX | |
| L8 | L34 0542-05 | Tuning coil | 1 9 | | ANT | |
| L9 | L34-0545-05 | Tuning coil | WWV | | ANT | |
| L10 | L34-0543-05 | Tuning coil | 3 5 | | ANT | |
| L11 | L34-0544 05 | Tuning coil | 7 | | ANT | |
| L12 | L34-0545-05 | Tuning coil | 14 | | ANT | |
| L13 | L34-0546-15 | Tuning coil | 21 | | ANT | |
| L14 | L34-0547-15 | Tuning coil | 28 | | ANT | |
| L15 | L34-0552-15 | Tuning coil | 1 9 | | DRIVE | |
| L16 | L34-0553-05 | Tuning coil | 3 5 | | DRIVE | |
| L17 | L34-0554-05 | Tuning coil | 7 | | DRIVE | |
| L18 | L34-0555-05 | Tuning coil | 14 | | DRIVE | |

| Ref. No. | Parts No | Description | | Re-marks |
|---|---|---|---|---|
| L19 | L34-0556-05 | Tuning coil 21 | DRIVE | |
| L20 | L34-0557-05 | Tuning coil 28 | DRIVE | |
| L21 ~ 23 | L40-0711-03 | Ferri-indicator | | |
| L24 | L34-0558-05 | Trap coil | | |
| L25 | L34-0559-05 | Trap coil | | |
| VC1 ~ 3 | C01-0127-15 | Variable capacitor | | |
| | | **MISCELLANEOUS** | | |
| – | D13-0032-03 | Sprocket × 3 | | |
| – | D13-0055-04 | Sprocket × 3 | | |
| – | D16-0021-04 | Chain ass'y | | |
| – | D21-0412-14 | Shaft | | |
| – | E23-0015-04 | Lug (ground) | | |
| – | E23-0047-04 | Terminal (square) | | |
| – | E40-0315-05 | Mini connector × 2 | | |
| – | E40-0401-05 | Connector × 3 | | |
| – | F10-0399-04 | Shield plate × 2 | | |
| – | J19-0486-04 | VC stopper × 2 | | |
| – | S29-6003-05 | Rotary wafer ass'y | | |

## RF (X44-1150-00)

| Ref No | Parts No | Description | | | |
|---|---|---|---|---|---|
| | | **CAPACITOR** | | | |
| C1 | CC45SL1H330J | Ceramic | 33pF | ±5% | |
| C2,3 | CK45F1H103Z | Ceramic | 0.01μF | +80% −20% | |
| C4 | C90-0262-05 | Ceramic | 0.047μF | ±10% | |
| C5 | CK45F1H103Z | Ceramic | 0.01μF | ±20% | |
| C6 | CK45K1H102M | Ceramic | 0.001μF | ±20% | |
| C7 | C90-0262-05 | Ceramic | 0.0047μF | ±10% | |
| C8 | CC45SL2H151J | Ceramic | 150pF | ±5% | |
| C9 | CQ93M2A473K | Mylar | 0.047μF | ±10% | |
| C10 | C91-0022-05 | Ceramic | 0.001μF | ±5% | |
| C11 | C90-0262-05 | Ceramic | 0.047μF | ±10% | |
| C12 | CK45E2H103P | Ceramic | 0.01μF | +100% −0% | |
| C13,14 | CK45F1H103Z | Ceramic | 0.01μF | +80% −20% | |
| C15 | CQ93M2A473K | Mylar | 0.047μF | ±10% | |
| C16,17 | CK45E2H103P | Ceramic | 0.01μF | +100% −0% | |
| C18 | C90-0262-05 | Ceramic | 0.047μF | ±10% | |
| C20 | CK45F1H103Z | Ceramic | 0.01μF | +80% −20% | |
| C21 | C90-0162-05 | Ceramic | 0.047μF | ±10% | |
| C22 | CC45SL1H100D | Ceramic | 10pF | ±0 5pF | |
| C23 | CK45F1H103Z | Ceramic | 0.01μF | +80% −20% | |
| C24 | CC45RH1H120J | Ceramic | 12pF | ±5% | |
| C25 | CC45RH1H390J | Ceramic | 39pF | ±5% | |
| C26,27 | CK45F1H103Z | Ceramic | 0.01μF | +80% −20% | |
| C29 | C90-0262-05 | Ceramic | 0.047μF | ±10% | |
| C30 | CK45F1H103Z | Ceramic | 0.01μF | +80% −20% | |
| C31 | C90-0262-05 | Ceramic | 0.047μF | ±10% | |
| C32,33 | CK45D1H102M | Ceramic | 0.001μF | ±20% | |
| C34 | CK45F1H103Z | Ceramic | 0 01μF | +80% −20% | |
| C35 | CQ93M2A224M | Mylar | 0.22μF | ±20% | |
| C36 | CK45D1H102M | Ceramic | 0.01μF | ±20% | |
| C37 | C90-0262-05 | Ceramic | 0.047μF | ±10% | |
| C38 | CE04W1H010(RL) | Electrolytic | 1μF | 50WV | |

# PARTS LIST

| Ref. No. | Parts No. | Description | | | | Re-marks |
|---|---|---|---|---|---|---|
| C39 | CE04W1HR47(RL) | Electrolytic | 0.47μF | 20WV | | |
| C40 | C90-0262-05 | Ceramic | 0.047μF | ±10% | | |
| C41 | CK45E2H103P | Ceramic | 0.01μF | +100%−0% | | |
| C43～45 | CK45F1H103Z | Ceramic | 0.01μF | +80%−20% | | |
| C46～48 | C90-0262-05 | Ceramic | 0.047μF | ±10% | | |
| C49 | CC45SL1H220J | Ceramic | 22pF | ±5% | | |
| C50 | CC45SL1H150J | Ceramic | 15pF | ±5% | | |
| C51,52 | CK45F1H103Z | Ceramic | 0.01μF | +80%−20% | | |
| C53 | CK45E2H103P | Ceramic | 0.01μF | +100%−0% | | |
| **RESISTOR** | | | | | | |
| R1 | PD14CY2E101J | Carbon | 100Ω | ±5% | 1/4W | |
| R2,3 | PD14CY2E104J | Carbon | 100kΩ | ±5% | 1/4W | |
| R4 | PD14CY2E471J | Carbon | 470Ω | ±5% | 1/4W | |
| R5 | PD14CY2E822J | Carbon | 8.2kΩ | ±5% | 1/4W | |
| R6 | PD14CY2E682J | Carbon | 6.8kΩ | ±5% | 1/4W | |
| R7 | PD14CY2E273J | Carbon | 27kΩ | ±5% | 1/4W | |
| R8 | PD14CY2E333J | Carbon | 33kΩ | ±5% | 1/4W | |
| R9 | PD14CY2E104J | Carbon | 100kΩ | ±5% | 1/4W | |
| R10 | PD14CY2E820J | Carbon | 82Ω | ±5% | 1/4W | |
| R11 | RC05GF2H680J | Carbon | 68Ω | ±5% | 1/2W | |
| R12 | PD14CY2E563J | Carbon | 56Ω | ±5% | 1/4W | |
| R13 | RC04GF2H823J | Carbon | 82kΩ | ±5% | 1/2W | |
| R14 | RC05GF2H392J | Carbon | 3.9kΩ | ±5% | 1/2W | |
| R15 | PD14CY2E822J | Carbon | 8.2kΩ | ±5% | 1/4W | |
| R16 | PD14CY2E472J | Carbon | 4.7kΩ | ±5% | 1/4W | |
| R17 | PD14CY2E393J | Carbon | 39kΩ | ±5% | 1/4W | |
| R18 | PD14CY2E392J | Carbon | 3.9kΩ | ±5% | 1/4W | |
| R19 | PD14CY2E472J | Carbon | 4.7kΩ | ±5% | 1/4W | |
| R20 | PD14CY2E561J | Carbon | 560Ω | ±5% | 1/4W | |
| R21,22 | PD14CY2E333J | Carbon | 33kΩ | ±5% | 1/4W | |
| R23 | PD14CY2E123J | Carbon | 12kΩ | ±5% | 1/4W | |
| R24 | PD14CY2E104J | Carbon | 100kΩ | ±5% | 1/4W | |
| R25 | PD14CY2E123J | Carbon | 12kΩ | ±5% | 1/4W | |
| R26 | PD14CY2E101J | Carbon | 100Ω | ±5% | 1/4W | |
| R27 | PD14CY2E221J | Carbon | 220Ω | ±5% | 1/4W | |
| R28 | PD14CY2E393J | Carbon | 39kΩ | ±5% | 1/4W | |
| R29 | PD14CY2E474J | Carbon | 470kΩ | ±5% | 1/4W | |
| R30 | PD14CY2E473J | Carbon | 47kΩ | ±5% | 1/4W | |
| R31 | PD14CY2E222J | Carbon | 2.2kΩ | ±5% | 1/4W | |
| R32 | PD14CY2E182J | Carbon | 1.8kΩ | ±5% | 1/4W | |
| R33 | PD14CY2E102J | Carbon | 1kΩ | ±5% | 1/4W | |
| R34 | PD14CY2E182J | Carbon | 1.8kΩ | ±5% | 1/4W | |
| R35 | PD14CY2E470J | Carbon | 47Ω | ±5% | 1/4W | |
| R36 | PD14CY2E474J | Carbon | 470kΩ | ±5% | 1/4W | |
| R37 | PD14CY2E105J | Carbon | 1MΩ | ±5% | 1/4W | |
| R38,39 | PD14CY2E103J | Carbon | 10kΩ | ±5% | 1/4W | |
| R40 | PD14CY2E331J | Carbon | 330Ω | ±5% | 1/4W | |
| R41 | PD14CY2E103J | Carbon | 10kΩ | ±5% | 1/4W | |
| R42 | PD14CY2E274J | Carbon | 270kΩ | ±5% | 1/4W | |
| R43 | PD14CY2E103J | Carbon | 10kΩ | ±5% | 1/4W | |
| R44 | RC05GF2H225J | Carbon | 2.2MΩ | ±5% | 1/2W | |
| R45 | PD14CY2E101J | Carbon | 100Ω | ±5% | 1/4W | |
| R46 | PD14CY2E104J | Carbon | 100kΩ | ±5% | 1/4W | |
| R47 | PD14CY2E154J | Carbon | 150kΩ | ±5% | 1/4W | |
| R48 | PD14CY2E184J | Carbon | 180kΩ | ±5% | 1/4W | |
| R49,50 | PD14CY2E471J | Carbon | 470Ω | ±5% | 1/4W | |
| R51 | PD14CY2E101J | Carbon | 100Ω | ±5% | 1/4W | |
| R52 | PD14CY2E471J | Carbon | 470Ω | ±5% | 1/4W | |
| R53 | PD14CY2E222J | Carbon | 2.2kΩ | ±5% | 1/4W | |
| R54 | PD14CY2E470J | Carbon | 47Ω | ±5% | 1/4W | |
| R55 | RC05GF2H474J | Carbon | 470kΩ | ±5% | 1/2W | |
| R56 | PD14BY2B470J | Carbon | 470Ω | ±5% | 1/4W | |

| Ref. No. | Parts No. | Description | | Re-marks |
|---|---|---|---|---|
| **SEMICONDUCTOR** | | | | |
| Q1 | V09-0057-05 | FET | 3SK41(L) | |
| Q2 | V09-0036-05 | FET | 3SK35(GR) | |
| Q3 | V09-0057-05 | FET | 3SK41(L) | |
| Q4 | V03-0123-05 | Transistor | 2SC733(Y) | |
| Q5 | V03-0450-05 | Transistor | 2SC1515(K) | |
| Q6～8 | V09-0577-05 | FET | 3SK41(L) | |
| D1 | V11-0240-05 | Zener diode | WZ-090 | |
| D2,3 | V11-0219-05 | Diode | V06B | |
| D4 | V11-0414-05 | Diode | IS2588 | |
| D5 | V11-0076-05 | Diode | IS1555 | |
| D6 | V11-0414-05 | Diode | IS2588 | |
| D7 | V11-0076-05 | Diode | IS1555 | |
| D8 | V11-0250-05 | Zener diode | WZ-090 | |
| D9,10 | V11-0219-05 | Diode | V06B | |
| **COIL/TRANSFORMER** | | | | |
| L1,2 | L40-1511-03 | Ferri-indicator | 150μH | |
| L3～5 | L40-4711-03 | Ferri-indicator | 470μH | |
| L6,7 | L40-1511-03 | Ferri-indicator | 150μH | |
| L8 | L33-0074-05 | Heater choke | 0.22μH | |
| L9 | L40-4782-02 | Ferri-indicator | 0.47μH | |
| L10 | L40-1511-03 | Ferri-indicator | 150μH | |
| T1,2 | L34-0527-05 | Tuning coil | | |
| T3,4 | L34-0524-05 | Transformer (wide range) | | |
| **TUBE** | | | | |
| V1 | V40-0114-00 | Tube 12BY7A | | |
| **MISCELLANEOUS** | | | | |
| J8,9 | R92-0150-05 | Short jamper × 2 | | |
| J10 | R92-0152-05 | Short jamper | | |
| RF1～3 | E40-1026-05 | Type U, Wafer pin | | |
| — | E10-1902-05 | Tube socket | | |
| — | E23-0047-04 | Terminal (square) | | |
| — | E40-0406-05 | Connector | | |
| — | F11-0249-05 | Shield case | | |

## IF (X48-1150-00)

| Ref. No. | Parts No. | Description | | | Re-marks |
|---|---|---|---|---|---|
| **CAPACITOR** | | | | | |
| C1 | CC45SL1H221J | Ceramic | 220pF | ±5% | |
| C2 | CC45SL1H100D | Ceramic | 10pF | ±0.5pF | |
| C3 | CC45SL1H030C | Ceramic | 3pF | ±0.25pF | |
| C4,5 | CC45SL1H470J | Ceramic | 47pF | ±5% | |
| C6,7 | CK45F1H103Z | Ceramic | 0.01μF | +80%−20% | |
| C8 | CE04W1C100 | Electrolytic | 10μF | 16WV | |
| C9～11 | CK45F1H103Z | Ceramic | 0.01μF | +80%−20% | |
| C12,13 | C90-0254-05 | Ceramic | 0.022μF | 25WV | |
| C14,15 | CK45F1H103Z | Ceramic | 0.01μF | +80%−20% | |
| C16,17 | C90-0254-05 | Ceramic | 0.022μF | 25WV | |
| C18～20 | CK45F1H103Z | Ceramic | 0.01μF | +80%−20% | |
| C21,22 | C90-0254-05 | Ceramic | 0.022μF | 25WV | |
| C24 | C90-0254-05 | Ceramic | 0.022μF | 25WV | |
| C25 | CC45SL1H470J | Ceramic | 47pF | ±5% | |
| C26,27 | CK45F1H103Z | Ceramic | 0.01μF | +80%−20% | |

# PARTS LIST

| Ref. No. | Parts No. | Description | | | Re-marks |
|---|---|---|---|---|---|
| C28,29 | C90-0254-05 | Ceramic | 0.022μF | 25WV | |
| C30 | CC45SL1H470J | Ceramic | 47pF | ±5% | |
| C31 | CL45F1J103Z | Ceramic | 0.01μF | +80%−20% | |
| C32 | C90-0262-05 | Ceramic | 0.047μF | 25WV | |
| C33 | C90-0254-05 | Ceramic | 0.022μF | 25WV | |
| C34 | CC45SL1H100D | Ceramic | 10pF | ±0.5pF | |
| C35 | C90-0254-05 | Ceramic | 0.022μF | 25 WV | |
| C36 | CK45P1H102M | Ceramic | 0.001μF | ±20% | |
| C37 | CC45SL1H101J | Ceramic | 100pF | ±5% | |
| C38 | CK45F1H103Z | Ceramic | 0.01μF | +80%−20% | |
| C39~41 | C90-0254-05 | Ceramic | 0.022μF | 25WV | |
| C42 | CK45F1H103Z | Ceramic | 0.01μF | +80%−20% | |
| C43 | CE04W1H010 | Ceramic | 1μF | 50WV | |
| C44 | CK45F1H103Z | Ceramic | 0.01μF | +80%−20% | |
| C45 | CK45D1H102M | Ceramic | 0.001μF | ±20% | |
| C46 | CK45F1H103Z | Ceramic | 0.01μF | +80%−20% | |
| C47 | C90-0254-05 | Ceramic | 0.022μF | 25WV | |
| C48 | CK45F1H103Z | Ceramic | 0.01μF | +80%−20% | |
| C49 | CC45SL1H030C | Ceramic | 3pF | ±0.25pF | |
| C50,51 | C90-0254-05 | Ceramic | 0.22μF | 25WV | |
| C52 | CK45D1H102M | Ceramic | 0.001μF | ±20% | |
| C53 | CC45SL1H331J | Ceramic | 330pF | ±5% | |
| C54 | C90-0254-05 | Ceramic | 0.022μF | 25WV | |
| C55 | CK45F1H103Z | Ceramic | 0.01μF | +80%−20% | |
| C56 | CC45SL1H010C | Ceramic | 1pF | ±0.25pF | |
| C57 | CC45SL1H470 | Ceramic | 47pF | ±5% | |
| C58 | C90-0254-05 | Ceramic | 0.022μF | 25WV | |
| C59 | CC45SL1H101J | Ceramic | 100pF | ±5% | |
| C61 | CC45SL1H100D | Ceramic | 10pF | ±0.5pF | |
| C62 | CE04W1C100 | Electrolytic | 10μF | 16WV | |
| C64 | CQ92M1H103K | Mylar | 0.01μF | ±10% | |
| C65 | CE04W1C010 | Electrolytic | 1μF | 50WV | |
| C66 | CK45D1H102M | Ceramic | 0.001μF | ±20% | |
| C67 | CE04W1C330 | Electrolytic | 33μF | 16WV | |
| C68 | C90-0254-05 | Ceramic | 0.022μF | 25WV | |
| C69 | CC45SL1H470J | Ceramic | 47pF | ±5% | |
| C70 | CC45SL1H221J | Ceramic | 220pF | ±5% | |
| C71 | C90-0254-05 | Ceramic | 0.022μF | 25WV | |
| C72 | CK45F1H103Z | Ceramic | 0.01μF | +80%−20% | |
| C73 | CE04W1H010 | Electrolytic | 1μF | 50WV | |
| C74 | C90-0262-05 | Ceramic | 0.047 | 25WV | |
| C75 | CE04W1H010(RL) | Electrolytic | 1pF | 50WV | |
| C75 | CK45F1H103Z | Ceramic | 0:01μF | +80%−20% | |
| C77 | CK45D1H102M | Ceramic | 0.001μF | ±20% | |
| C79 | CC45SL1H470J | Ceramic | 47pF | ±5% | |
| C81 | C90-0254-05 | Ceramic | 0.022μF | 25WV | |
| C82,83 | CK45F1H103Z | Ceramic | 0.01μF | +80%−20% | |
| C84 | CC45UJ1H220J | Ceramic | 22pF | ±5% | |
| C85,86 | CK45F1H103Z | Ceramic | 0.01μF | +80%−20% | |
| C87 | CC45SL1H101J | Ceramic | 100pF | ±5% | |
| C8 89 | C90-0245-05 | Ceramic | 0.047μF | 25WV | |
| C90 | C90-0262-05 | Ceramic | 0.022μF | 25WV | |
| C91 | CK45F1H103Z | Ceramic | 0.01μF | +80%−20% | |
| C92 | CC45SL1H050D | Ceramic | 5pF | ±0.5pF | |
| C93,94 | CC45SL1H101J | Ceramic | 100pF | ±5% | |
| C95 | CE04W1H010 | Electrolytic | 1μF | 50WV | |
| C96 | C91-0404-05 | Electrolytic | 330μF | 10WV | |
| C97 | CC45SL1H470J | Ceramic | 47pF | ±5% | |
| C99 | CE04W1H010 | Electrolytic | 1μF | 50WV | |

| Ref No. | Parts No. | Description | | | Re-marks |
|---|---|---|---|---|---|
| C100 | CQ92M1H153K | Mylar | 0.015μF | ±10% | |
| C101 | CE04W1E4R7(RL) | Electrolytic | 4.7μF | 25WV | |
| C102 | C90-0162-05 | Ceramic | 0.047μF | 25WV | |
| C103 | CE04W1A470(RL) | Electrolytic | 47μF | 10WV | |
| C104 | CE04W1H010(RL) | Electrolytic | 1μF | 50WV | |
| C105 | CE04W1H3R3(RL) | Electrolytic | 3.3μF | 50WV | |
| C106 | CE04WE4R7(RL) | Electrolytic | 4.7μF | 25WV | |
| C107,108 | CE04W1H010(RL) | Electrolytic | 1μF | 50WV | |
| C109 | CE04W1C100(RL) | Electrolytic | 10μF | 16WV | |
| C110 | CK45F1H103Z | Ceramic | 0.01μF | +80%−20% | |
| C111 | C90-0262-05 | Ceramic | 0.047μF | 25WV | |
| C112~116 | C90-0254-05 | Ceramic | 0.022μF | 25WV | |
| C117 | CK45F1H103Z | Ceramic | 0.01μF | +80%−20% | |
| C118 | C90-0254-05 | Ceramic | 0.022μF | 25WV | |
| C119,120 | CE04W1H010(RL) | Electrolytic | 1μF | 50WV | |
| C121 | CE04W1C100(RL) | Electrolytic | 10μF | 16WV | |
| C122 | C90-0262-05 | Ceramic | 0.047μF | 25WV | |
| C123 | C092M1H102K | Mylar | 0.001μF | ±10% | |
| C124 | C90-0262-05 | Ceramic | 0.047μF | ±5% | |
| C125 | CC45RH1H151J | Ceramic | 150pF | ±5% | |
| C127 | CC45PG1H151J | Ceramic | 150pF | ±5% | |
| C128 | CC45SL1H100D | Ceramic | 10pF | ±0.5pF | |
| C129 | CC45SL1H220J | Ceramic | 22pF | ±5% | |
| C130,131 | CQ92M1H103K | Mylar | 0.01μF | ±10% | |
| C132 | C90-0254-05 | Ceramic | 0.022μF | 25WV | |
| C133 | CC45SL1H220J | Ceramic | 22pF | ±5% | |
| C134 | CC45SL1H101J | Ceramic | 100pF | ±5% | |
| C135 | CE04W1H010 | Electrolytic | 1μF | 50WV | |
| C138 | CE04W1E4R7 | Electrolytic | 47μF | 4.7μF | |
| C139 | CK45F1H103Z | Ceramic | 0.01μF | +80%−20% | |
| C140 | C90-0254-05 | Ceramic | 0.022μF | 25WV | |
| C141 | CE04W1C470 | Electrolytic | 47μF | 16WV | |
| C142 | CC45SL1H470J | Ceramic | 47pF | ±5% | |
| C144 | CE04W1H010 | Electrolytic | 1μF | 50WV | |
| C145 | CC45CH1H680J | Ceramic | 68pF | ±5% | |
| C146 | CK45F1H103Z | Ceramic | 0.001μF | +80%−20% | |
| C147 | CC45SL1H100D | Ceramic | 10pF | ±0.5pF | |
| C148 | CK45F1H473 | 0.047μF | +80%−20% | | |
| | **RESISTOR** | | | | |
| R1 | PD14CY2B392J | Carbon | 3.9kΩ | ±5% | 1/8W |
| R2 | PD14CY2B102J | Carbon | 1kΩ | ±5% | 1/8W |
| R3 | PD14CY2B472J | Carbon | 4.7kΩ | ±5% | 1/8W |
| R4 | PD14CY2B102J | Carbon | 1kΩ | ±5% | 1/8W |
| R5 | PD14CY2B392J | Carbon | 3.9kΩ | ±5% | 1/8W |
| R6 | PD14CY2B221J | Carbon | 220Ω | ±5% | 1/8W |
| R7 | PD14CY2B473J | Carbon | 47kΩ | ±5% | 1/8W |
| R8 | PD14CY2B221J | Carbon | 220Ω | ±5% | 1/8W |
| R9 | PD14CY2B561J | Carbon | 560Ω | ±5% | 1/8W |
| R10 | PD14CY2B221J | Carbon | 220Ω | ±5% | 1/8W |
| R11 | PD14CY2B392J | Carbon | 3.9kΩ | ±5% | 1/8W |
| R12 | PD14CY2B473J | Carbon | 47kΩ | ±5% | 1/8W |
| R13 | PD14CY2B221J | Carbon | 220Ω | ±5% | 1/8W |
| R14 | PD14CY2B561J | Carbon | 560Ω | ±5% | 1/8W |
| R15 | PD14CY2B392J | Carbon | 3.9kΩ | ±5% | 1/8W |
| R16 | PD14CY2B103J | Carbon | 10kΩ | ±5% | 1/8W |
| R17 | PD14CY2B123J | Carbon | 12kΩ | ±5% | 1/8W |
| R18 | PD14CY2B473J | Carbon | 47kΩ | ±5% | 1/8W |
| R19 | PD14CY2B102J | Carbon | 1kΩ | ±5% | 1/8W |
| R21 | PD14CY2B101J | Carbon | 100Ω | ±5% | 1/8W |
| R23 | PD14CY2B153J | Carbon | 15kΩ | ±5% | 1/8W |

# PARTS LIST

| Ref. No. | Parts No. | Description | | | | Re-marks |
|---|---|---|---|---|---|---|
| R24 | PD14CY2B122J | Carbon | 1.2kΩ | ±5% | 1/8W | |
| R25 | PD14CY2B152J | Carbon | 1.5Ω | ±5% | 1/8W | |
| R26 | PD14CY2B221J | Carbon | 220Ω | ±5% | 1/8W | |
| R27 | PD14CY2B103J | Carbon | 10kΩ | ±5% | 1/8W | |
| R28 | PD14CY2B473J | Carbon | 47kΩ | ±5% | 1/8W | |
| R29 | PD14CY2B471J | Carbon | 470Ω | ±5% | 1/8W | |
| R30 | PD14CY2B101J | Carbon | 100Ω | ±5% | 1/8W | |
| R31 | PD14CY2B103J | Carbon | 10kΩ | ±5% | 1/8W | |
| R32 | PD14CY2B274J | Carbon | 270kΩ | ±5% | 1/8W | |
| R33 | PD14CY2B471J | Carbon | 470Ω | ±5% | 1/8W | |
| R34 | PD14CY2B101J | Carbon | 100Ω | ±5% | 1/8W | |
| R35,36 | PD14CY2B472J | Carbon | 4.7kΩ | ±5% | 1/8W | |
| R37 | PD14CY2B682J | Carbon | 6.8kΩ | ±5% | 1/8W | |
| R38,39 | PD14CY2B103J | Carbon | 10kΩ | ±5% | 1/8W | |
| R40 | PD14CY2B102J | Carbon | 1kΩ | ±5% | 1/8W | |
| R41 | PD14CY2B472J | Carbon | 4.7kΩ | ±5% | 1/8W | |
| R42 | PD14CY2B102J | Carbon | 1kΩ | ±5% | 1/8W | |
| R43 | PD14CY2B123J | Carbon | 12kΩ | ±5% | 1/8W | |
| R44 | PD14CY2B221J | Carbon | 220Ω | ±5% | 1/8W | |
| R45 | PD14CY2B333J | Carbon | 33kΩ | ±5% | 1/8W | |
| R46 | PD14CY2B683J | Carbon | 68kΩ | ±5% | 1/8W | |
| R47 | PD14CY2B102J | Carbon | 1kΩ | ±5% | 1/8W | |
| R48 | PD14CY2B471J | Carbon | 470Ω | ±5% | 1/8W | |
| R49 | PD14CY2B333J | Carbon | 33kΩ | ±5% | 1/8W | |
| R50 | PD14CY2B103J | Carbon | 10kΩ | ±5% | 1/8W | |
| R51 | PD14CY2B222J | Carbon | 2.2Ω | ±5% | 1/8W | |
| R52 | PD14CY2B224J | Carbon | 220kΩ | ±5% | 1/8W | |
| R53 | PD14CY2B222J | Carbon | 2.2kΩ | ±5% | 1/8W | |
| R54 | PD14CY2B154J | Carbon | 150kΩ | ±5% | 1/8W | |
| R55 | PD14CY2B333J | Carbon | 33kΩ | ±5% | 1/8W | |
| R56 | PD14CY2B331J | Carbon | 330Ω | ±5% | 1/8W | |
| R57 | PD14CY2B152J | Carbon | 1.5Ω | ±5% | 1/8W | |
| R58 | PD14CY2B104J | Carbon | 110kΩ | ±5% | 1/8W | |
| R59 | PD14CY2B273J | Carbon | 27kΩ | ±5% | 1/8W | |
| R60 | PD14CY2B223J | Carbon | 22kΩ | ±5% | 1/8W | |
| R61 | PD14CY2B102J | Carbon | 1kΩ | ±5% | 1/8W | |
| R63 | PD14CY2B103J | Carbon | 10kΩ | ±5% | 1/8W | |
| R64 | PD14CY2B224J | Carbon | 220kΩ | ±5% | 1/8W | |
| R65 | PD14CY2B222J | Carbon | 2.2kΩ | ±5% | 1/8W | |
| R66 | RC05GFH225J | Carbon | 2.2MΩ | ±5% | 1/2W | |
| R67 | PD14CY2B103J | Carbon | 10kΩ | ±5% | 1/8W | |
| R68 | PD14CY2B332J | Carbon | 3.3kΩ | ±5% | 1/8W | |
| R69 | PD14CY2B683J | Carbon | 68kΩ | ±5% | 1/8W | |
| R70 | PD14CY2B561J | Carbon | 560Ω | ±5% | 1/8W | |
| R71 | PD14CY2B471J | Carbon | 470Ω | ±5% | 1/8W | |
| R72 | PD14CY2B330J | Carbon | 33Ω | ±5% | 1/8W | |
| R73,74 | PD14CY2B221J | Carbon | 220Ω | ±5% | 1/8W | |
| R75,76 | PD14CY2B474J | Carbon | 470kΩ | ±5% | 1/8W | |
| R77 | PD14CY2B274J | Carbon | 270kΩ | ±5% | 1/8W | |
| R78 | PD14CY2B394J | Carbon | 390kΩ | ±5% | 1/8W | |
| R79 | PD14CY2B221J | Carbon | 220Ω | ±5% | 1/8W | |
| R80 | PD14CY2B102J | Carbon | 1kΩ | ±5% | 1/8W | |
| R81 | PD14CY2B273J | Carbon | 2.7kΩ | ±5% | 1/8W | |
| R82 | PD14CY2B104J | Carbon | 100kΩ | ±5% | 1/8W | |
| R83 | PD14CY2B103J | Carbon | 10kΩ | ±5% | 1/8W | |
| R84 | PD14CY2B104J | Carbon | 100kΩ | ±5% | 1/8W | |
| R85 | PD14CY2B223J | Carbon | 22kΩ | ±5% | 1/8W | |
| R86 | PD14CY2B101J | Carbon | 100Ω | ±5% | 1/8W | |
| R87 | PD14CY2B102J | Carbon | 1kΩ | ±5% | 1/8W | |
| R88 | PD14CY2B562J | Carbon | 5.6Ω | ±5% | 1/8W | |
| R89 | PD14CY2B103J | Carbon | 10kΩ | ±5% | 1/8W | |
| R90 | PD14CY2B154J | Carbon | 150kΩ | ±5% | 1/8W | |

| Ref. No | Parts No. | Description | | | | Re-marks |
|---|---|---|---|---|---|---|
| R91 | PD14CY2B102J | Carbon | 1kΩ | ±5% | 1/8W | |
| R92 | PD14CY2B331J | Carbon | 330Ω | ±5% | 1/8W | |
| R93,94 | PD14CY2B223J | Carbon | 22kΩ | ±5% | 1/8W | |
| R95 | PD14CY2B221J | Carbon | 220Ω | ±5% | 1/8W | |
| R96 | PD14CY2B102J | Carbon | 1kΩ | ±5% | 1/8W | |
| R97 | PD14CY2B183J | Carbon | 18kΩ | ±5% | 1/8W | |
| R98 | PD14CY2B153J | Carbon | 15kΩ | ±5% | 1/8W | |
| R99 | PD14CY2B683J | Carbon | 68kΩ | ±5% | 1/8W | |
| R100 | PD14CY2B223J | Carbon | 22kΩ | ±5% | 1/8W | |
| R101 | PD14CY2B102J | Carbon | 1kΩ | ±5% | 1/8W | |
| R102 | PD14CY2B221J | Carbon | 220Ω | ±5% | 1/8W | |
| R103,104 | PD14CY2B331J | Carbon | 330Ω | ±5% | 1/8W | |
| R105 | PD14CY2B103J | Carbon | 10kΩ | ±5% | 1/8W | |
| R106 | PD14CY2B332J | Carbon | 3.3kΩ | ±5% | 1/8W | |
| R107 | PD14CY2B102J | Carbon | 1kΩ | ±5% | 1/8W | |
| R108 | PD14CY2B471J | Carbon | 470Ω | ±5% | 1/8W | |
| R109 | PD14CY2B123J | Carbon | 12kΩ | ±5% | 1/8W | |
| R110 | PD14CY2B103J | Carbon | 10kΩ | ±5% | 1/8W | |
| R111 | PD14CY2B332J | Carbon | 3.3kΩ | ±5% | 1/8W | |
| R112 | PD14CY2B102J | Carbon | 1kΩ | ±5% | 1/8W | |
| R113 | PD14CY2B470J | Carbon | 470Ω | ±5% | 1/8W | |
| R114 | PD14CY2B103J | Carbon | 10kΩ | ±5% | 1/8W | |
| R115,116 | PD14CY2B471J | Carbon | 470Ω | ±5% | 1/8W | |
| R117 | PD14CY2B472J | Carbon | 4.7kΩ | ±5% | 1/8W | |
| R118 | PD14CY2B104J | Carbon | 100kΩ | ±5% | 1/8W | |
| R119 | PD14CY2B223J | Carbon | 22kΩ | ±5% | 1/8W | |
| R120 | PD14CY2B562J | Carbon | 5.6kΩ | ±5% | 1/8W | |
| R121 | PD14CY2B102J | Carbon | 1kΩ | ±5% | 1/8W | |
| R122 | PD14CY2B473J | Carbon | 47kΩ | ±5% | 1/8W | |
| R123 | PD14CY2B221J | Carbon | 220Ω | ±5% | 1/8W | |
| R124 | PD14CY2B562J | Carbon | 5.6kΩ | ±5% | 1/8W | |
| R125 | PD14CY2B392J | Carbon | 3.9kΩ | ±5% | 1/8W | |
| R126 | PD14CY2B102J | Carbon | 1kΩ | ±5% | 1/8W | |
| R127 | PD14CY2B332J | Carbon | 3.3Ω | ±5% | 1/8W | |
| R128 | PD14CY2B101J | Carbon | 100Ω | ±5% | 1/8W | |
| R129 | PD14CY2B104J | Carbon | 100kΩ | ±5% | 1/8W | |
| R130 | PD14CY2B474J | Carbon | 470kΩ | ±5% | 1/8W | |
| R132 | PD14CY2B331J | Carbon | 330Ω | ±5% | 1/8W | |
| R133 | PD14CY2B101J | Carbon | 100Ω | ±5% | 1/8W | |
| R134 | PD14CY2B222J | Carbon | 2.2kΩ | ±5% | 1/8W | |
| R137 | PD14CY2B223J | Carbon | 22kΩ | ±5% | 1/8W | |
| R138 | PD14CY2B471J | Carbon | 470Ω | ±5% | 1/8W | |
| R139 | PD14CY2B104J | Carbon | 100kΩ | ±5% | 1/8W | |
| R140 | PD14CY2B101J | Carbon | 100Ω | ±5% | 1/8W | |
| R141 | PD14CY2B102J | Carbon | 1kΩ | ±5% | 1/8W | |
| R142 | PD14CY2B102J | Carbon | 1kΩ | ±5% | 1/8W | |
| R143 | PD14CY2B561J | Carbon | 560Ω | ±5% | 1/8W | |
| R145 | PD14CY2B102J | Carbon | 1kΩ | ±5% | 1/8W | |
| R146 | PD14CY2B472J | Carbon | 4.7kΩ | ±5% | 1/8W | |
| R147 | PD14CY2B103J | Carbon | 10kΩ | ±5% | 1/8W | |
| R148 | PD14CY2B221J | Carbon | 220Ω | ±5% | 1/8W | |
| R149,150 | PD14CY2B270J | Carbon | 27Ω | ±5% | 1/8W | |
| R151 | PD14CY2B822J | Carbon | 8.2kΩ | ±5% | 1/8W | |
| R152 | PD14CY2B473J | Carbon | 47kΩ | ±5% | 1/8W | |
| R153 | PD14CY2B470J | Carbon | 47Ω | ±5% | 1/8W | |
| R154 | PD14BY2E474J | Carbon | 470kΩ | ±5% | 1/4W | |
| **SEMICONDUCTOR** | | | | | | |
| Q1～3 | V09-0036-05 | FET | 3SK35GR | | | |
| Q4 | V09-0012-05 | FET | 2SK19(GR) | | | |
| Q5 | V01-0027-05 | Transistor | 2SA495(Y) | | | |
| Q6 | V03-0123-05 | Transistor | 2SC733(Y) | | | |
| Q7 | V09-0012-05 | FET | 2SK19(GR) | | | |

# PARTS LIST

| Ref. No. | Parts No. | Description | Remarks |
|---|---|---|---|
| Q8～10 | V03-0079-05 | Transistor 2SC460(B) | |
| Q11 | V03-0123-05 | Transistor 2SC733(Y) | |
| Q12,13 | V03-0079-05 | Transistor 2SC460(B) | |
| Q14 | V09-0012-05 | FET 2SK19(GR) | |
| Q15,16 | V03-0123-05 | Transistor 2SC733(Y) | |
| Q17 | V03-0079-05 | Transistor 2SC460(B) | |
| Q18 | V09-0036-05 | FET 3SK35(GR) | |
| Q19 | V03-0299-05 | Transistor 2SC1000(GR) | |
| Q20,21 | V03-0123-05 | Transistor 2SC733(Y) | |
| Q22 | V03-0299-05 | Transistor 2SC1000(GR) | |
| Q23～25 | V03-0270-05 | Transistor 2SC945(R) | |
| Q26 | V03-0079-05 | Transistor 2SC733(Y) | |
| Q27 | V01-0037-05 | Transistor 2SA495(Y) | |
| Q28,29 | V03-0270-05 | Transistor 2SC945(R) | |
| Q30 | V03-0123-05 | Transistor 2SC733(Y) | |
| D1～8 | V11-0370-05 | Diode IS1587 | |
| D9～14 | V11-0051-05 | Diode IN60 | |
| D15 | V21-0004-05 | Varistor MV-13 | |
| D16～19 | V11-0051-05 | Diode IN60 | |
| D20,21 | V11-0076-05 | Diode IS1555 | |
| D22 | V11-0240-05 | Zener diode WZ090 | |
| D23 | V11-0076-05 | Diode IS1555 | |
| D24 | V11-0370-05 | Diode IS1587 | |
| D25～29 | V11-0051-05 | Diode IN60 | |
| D30 | V11-0076-05 | Diode IS1555 | |
| D31～41 | V11-0051-05 | Diode IN60 | |
| D42 | V11-0240-05 | Zener diode WZ090 | |
| D43 | V11-0076-05 | Diode IS1555 | |
| D44 | V11-0370-05 | Diode IS1587 | |
| D45 | V11-0076-05 | Diode IS1555 | |
| **POTENTIOMETER** | | | |
| VR1 | R12-3025-05 | Fixed resistor 10kΩ | |
| VR2 | R12-7013-05 | Semi-fixed resistor 500k | |
| VR3 | R12-1012-05 | Semi-fixed resistor 1kΩ | |
| VR4 | R12-4015-05 | Semi-fixed resistor 50kΩ | |
| VR5 | R12-0401-05 | Semi-fixed resistor 100Ω | |
| VR6 | R12-0045-05 | Semi-fixed resistor 100Ω | |
| VR7 | R12-3025-05 | Semi-fixed resistor 10kΩ | |
| **COIL/TRIMMER/FILTER** | | | |
| L1,3,4 | L40-1511-03 | Ferri inductor | |
| L5 | L40-1021-03 | Ferri inductor | |
| L6～11 | L40-1511-03 | Ferri inductor | |
| L13 | L40-1511-03 | Ferri inductor | |
| L15 | L40-1511-03 | Ferri inductor | |
| L16 | L40-1021-03 | Ferri inductor | |
| L17 | L40-4711-03 | Ferri inductor | |
| L18 | L40-1021-03 | Ferri inductor | |
| L20 | L40-6825-04 | Ferri inductor | |
| L21 | L40-1021-03 | Ferri inductor | |
| T1 | L34-0534-05 | Tuning coil | |
| T2 | L34-0536-05 | Tuning coil | |
| T3 | L34-0537-05 | Tuning coil | |
| T4 | L34-0538-05 | Tuning coil | |
| T5,6 | L34-0353-05 | Tuning coil | |
| T7 | L34-0536-05 | Tuning coil | |
| T8 | L34-0535-05 | Tuning coil | |
| T9 | L34-0536-05 | Tuning coil | |
| T10 | L34-0567-05 | Tuning coil | |
| T11 | L34-0539-05 | Tuning coil | |
| T12,13 | L34-0540-05 | Tuning coil | |
| T14 | L34-0539-05 | Tuning coil | |
| T15 | L34-0202-05 | Oscillator coil | |
| TC1,2 | C05-0030-05 | Ceramic trimmer | |
| TC3 | C05-0048-05 | Ceramic trimmer | |
| TC4 | C05-0009-05 | Ceramic trimmer | |
| TC5 | C05-0030-05 | Ceramic trimmer | |
| CF1～3 | L72-0038-05 | Ceramic filter | |
| **CRYSTAL QUARTZ** | | | |
| X1 | L77-0499-05 | NB filter | |
| X2 | L77-0500-05 | NB filter | |
| **MISCELLANEOUS** | | | |
| XF1 | L71-0023-05 | Crystal quartz filter SSB8.83MHz | |
| — | E23-0046-04 | Terminal (square) | |
| — | E23-0047-04 | Terminal (square) × 5 | |
| IF1 | E40-0714-05 | Mini-connector | |
| IF2 | E40-0512-05 | Mini-connector | |
| IF3 | E40-1714-05 | Mini-connector | |
| IF4,5 | E40-1414-05 | Mini-connector | |
| — | J21-1499-04 | PC board stopper (A) | |
| — | J21-1500-04 | PC board stopper (B) | |
| — | J21-0501-04 | PC board stopper (C) | |

## AF-AVR (X49-1080-00)

| Ref. No. | Parts No. | Description | Remarks |
|---|---|---|---|
| **CAPACITOR** | | | |
| C1 | CE04W1C221 | Electrolytic 220μF 16WV | |
| C2 | CQ92M1H273K | Mylar 0.027μF ±10% | |
| C3 | CK45B1H471K | Ceramic 470pF ±10% | |
| C4 | CQ92M1H273K | Mylar 0.027μF ±10% | |
| C5 | CE04W1E4R7 | Electrolytic 4.7μF 25WV | |
| C6,7 | CQ92M1H273K | Mylar 0.027μF ±10% | |
| C8,9 | CQ92M1H473K | Mylar 0.047μF ±10% | |
| C10 | CE04W1C100 | Electrolytic 10μF 16WV | |
| C11 | CE04W1HR47 | Electrolytic 0.47μF 50WV | |
| C12 | CQ92M1H103K | Mylar 0.01μF ±10% | |
| C13,14 | CE03W1C100 | Electrolytic 10μF 16WV | |
| C15 | CK45F1H103Z | Ceramic 0.01μF +80% −20% | |
| C16 | CQ92M1H104K | Mylar 0.1μF ±10% | |
| C17 | CE04W1H010 | Electrolytic 1μF 50WV | |
| C18 | CC45SLH101J | Ceramic 100pF ±5% | |
| C20 | CK45F1H103Z | Ceramic 0.01μF +80% −20% | |
| C21 | CE04W1H010 | Electrolytic 1μF 50WV | |
| C22 | CQ92M1H472K | Mylar 0.0047μF ±10% | |
| C23 | CE04W1C100 | Electrolytic 10μF 16WV | |
| C24 | CE04W0J101 | Electrolytic 100μF 6.3WV | |
| C25 | CC45SL1H470J | Ceramic 47pF ±5% | |
| C26 | CQ92M1H473K | Mylar 0.047μF ±10% | |
| C27 | CE04W1A470 | Electrolytic 47μF 10WV | |
| C28 | CC45SL1H101J | Ceramic 100pF ±5% | |
| C29 | CE04W1C221 | Electrolytic 220μF 16WV | |
| C30 | CK45F1H103Z | Ceramic 0.01μF +80% −20% | |
| C31 | CE04W2HR47 | Electrolytic 0.47μF ±10% | |
| C32 | CQ92M1H473K | Mylar 0.047μF ±10% | |
| C33 | CK45B1H331K | Ceramic 330pF ±10% | |
| **RESISTOR** | | | |
| R1,2 | PD14CY2E103J | Carbon 10kΩ ±5% 1/4W | |
| R3 | PD14CY2E473J | Carbon 47kΩ ±5% 1/4W | |

# PARTS LIST

| Ref No | Parts No. | Description | | | | Re-marks |
|---|---|---|---|---|---|---|
| R4 | PD14CY2E221J | Carbon | 220Ω | ±5% | 1/4W | |
| R5 | PD14CY2E102J | Carbon | 1kΩ | ±5% | 1/4W | |
| R6 | PD14CY2E562J | Carbon | 5.6kΩ | ±5% | 1/4W | |
| R7 | PD14CY2E472J | Carbon | 4.7kΩ | ±5% | 1/4W | |
| R8 | PD14CY2E103J | Carbon | 10kΩ | ±5% | 1/4W | |
| R9 | PD14CY2E332J | Carbon | 3.3kΩ | ±5% | 1/4W | |
| R10 | PD14CY2E182J | Carbon | 1.8Ω | ±5% | 1/4W | |
| R11 | PD14CY2E103J | Carbon | 10kΩ | ±5% | 1/4W | |
| R12 | PD14CY2E102J | Carbon | 1kΩ | ±5% | 1/4W | |
| R13 | PD14CY2E332J | Carbon | 3.3kΩ | ±5% | 1/4W | |
| R14 | PD14CY2E103J | Carbon | 10kΩ | ±5% | 1/4W | |
| R15 | PD14CY2E223J | Carbon | 22kΩ | ±5% | 1/4W | |
| R16 | PD14CY2E562J | Carbon | 5.6kΩ | ±5% | 1/4W | |
| R17 | PD14CY2E273J | Carbon | 27kΩ | ±5% | 1/4W | |
| R18 | PD14CY2E392J | Carbon | 3.9kΩ | ±5% | 1/4W | |
| R19 | PD14CY2E222J | Carbon | 2.2kΩ | ±5% | 1/4W | |
| R20 | PD14CY2E221J | Carbon | 220Ω | ±5% | 1/4W | |
| R21 | PD14CY2E222J | Carbon | 2.2kΩ | ±5% | 1/4W | |
| R22 | PD14CY2E821J | Carbon | 820Ω | ±5% | 1/4W | |
| R23 | PC14CY2E471J | Carbon | 470Ω | ±5% | 1/4W | |
| R24 | PC14CY2E682J | Carbon | 6.8kΩ | ±5% | 1/4W | |
| R25 | PC14CY2E473J | Carbon | 47kΩ | ±5% | 1/4W | |
| R27 | PC14CY2E102J | Carbon | 1kΩ | ±5% | 1/4W | |
| R28 | PC14CY2E392J | Carbon | 3.9kΩ | ±5% | 1/4W | |
| R29 | PC14CY2E471J | Carbon | 470Ω | ±5% | 1/4W | |
| R30 | PC14CY2E222J | Carbon | 2.2kΩ | ±5% | 1/4W | |
| R31 | PC14CY2E212J | Carbon | 2.7kΩ | ±5% | 1/4W | |
| R32 | PC14CY2E222J | Carbon | 2.2Ω | ±5% | 1/4W | |
| R33 | PC14CY2E821J | Carbon | 820Ω | ±5% | 1/4W | |
| R34 | PC14CY2E471J | Carbon | 470Ω | ±5% | 1/4W | |
| R35 | PC14CY2E331J | Carbon | 330Ω | ±5% | 1/4W | |
| R36 | PC14CY2E683J | Carbon | 68kΩ | ±5% | 1/4W | |
| R37 | PC14CY2E103J | Carbon | 10kΩ | ±5% | 1/4W | |
| R38 | RS14AB3A680J | Metal film | 68Ω | ±5% | 1W | |
| R39 | PD14CY2E224J | Carbon | 220kΩ | ±5% | 1/4W | |
| R40 | PD14CY2E820J | Carbon | 82Ω | ±5% | 1/4W | |
| R41 | PD14CY2E332J | Carbon | 3.3kΩ | ±5% | 1/4W | |
| R42 | PD14CY2E472J | Carbon | 4.7kΩ | ±5% | 1/4W | |
| R43 | PD14CY2E223J | Carbon | 22kΩ | ±5% | 1/4W | |
| R44 | PD14CY2E103J | Carbon | 10kΩ | ±5% | 1/4W | |
| R45 | PD14CY2E563J | Carbon | 56kΩ | ±5% | 1/4W | |
| R46,47 | PD14CY2E472J | Carbon | 4.7kΩ | ±5% | 1/4W | |
| **SEMICONDUCTOR** | | | | | | |
| Q1,2 | V03-0299-05 | Transistor | 2SC1000(GR) | | | |
| Q3 | V30-0172-05 | IC | TA7201P | | | |
| Q4～6 | V03-0099-05 | Transistor | 2SC372 | | | |
| Q7 | V11-0113-05 | Transistor | 2SA496 | | | |
| D1,2 | V11-0076-05 | Diode | 1S1555 | | | |
| D3,4 | V11-0051-05 | Diode | 1N60 | | | |
| D5 | V11-0243-05 | Zener diode | WZ-061 | | | |
| **POTENTIOMETER/COIL** | | | | | | |
| VR1 | R12-4020-05 | Semi-fixed resistor | 50kΩ | | | |
| VR2 | R12-3036-05 | Semi-fixed resistor | 10kΩ | | | |
| VR3 | R12-3004-05 | Semi-fixed resistor | 47kΩ | | | |
| VR4 | R12-0042-05 | Semi-fixed resistor | 500Ω | | | |
| L1 | L40-3391-03 | Ferri inductor | 3.3μH | | | |
| **MISCELLANEOUS** | | | | | | |
| AF1,2 | E40-0613-05 | Mini-connector | | | | |
| AF3 | E40-1113-05 | Mini-connector | | | | |

| Ref No | Parts No. | Description | Re-marks |
|---|---|---|---|
| — | F01-0242-04 | IC heat sink | |
| — | F01-0243-04 | AVR heat sink | |

## FIX-VOX (X50-1350-00)

| Ref. No | Parts No. | Description | | | | Re-marks |
|---|---|---|---|---|---|---|
| C1～4 | CC45CH1H220J | Ceramic | 22pF | ±5% | | |
| C5～7 | CK45F1H103Z | Ceramic | 0.01μF | +80%−20% | | |
| C6 | CC45CH1H270J | Ceramic | 27pF | ±5% | | |
| C7 | CK45F1H103Z | Ceramic | 0.01μF | +80%−20% | | |
| C8 | CC45CH1H330J | Ceramic | 33pF | ±5% | | |
| C9 | CC45CH1H680J | Ceramic | 68pF | ±5% | | |
| C10 | CK45F1H473Z | Ceramic | 0.047μF | +80%−20% | | |
| C11 | CC45CH1H050D | Ceramic | 5pF | ±0.5pF | | |
| C12 | CC45CH1H070D | Ceramic | 7pF | ±0.5pF | | |
| C13,14 | CC45CH1H120J | Ceramic | 12pF | ±5% | | |
| C15 | CK45F1H473Z | Ceramic | 0.047μF | +80%−20% | | |
| C16,17 | CK45F1H103Z | Ceramic | 0.01μF | +80%−20% | | |
| C18 | CE04W1H010 | Electrolytic | 1μF | 50WV | | |
| C19 | CK45B1H331K | Ceramic | 330pF | ±10% | | |
| C20 | CE04W1H3R3 | Electrolytic | 3.3μF | 50WV | | |
| C21 | CQ92M1H472K | Mylar | 0.047μF | ±10% | | |
| C22 | CQ92M1H473K | Mylar | 0.047μF | ±10% | | |
| C23 | CE04W1H3R3 | Electrolytic | 3.3μF | 50WV | | |
| C24 | CK45F1H103Z | Ceramic | 0.01μF | +80%−20% | | |
| C25 | CE04W1HR47 | Electrolytic | 0.47μF | 50WV | | |
| C26 | CE04W1C221(RL) | Electrolytic | 220μF | 16WV | | |
| C27 | CE04W1C101 | Electrolytic | 100μF | 16WV | | |
| C28 | CE04W0J470 | Electrolytic | 47μF | 6.3WV | | |
| C29 | CK45F1H223Z | Ceramic | 0.022μF | +80%−20% | | |
| C30 | CE04W1H3R3 | Electrolytic | 3.3μF | 50WV | | |
| C31 | CQ92M1H472K | Ceramic | 0.01μF | +80%−20% | | |
| C32 | CE04W1H010 | Electrolytic | 1μF | 50WV | | |
| C33 | CE04W1C100(RL) | Electrolytic | 10μF | 16WV | | |
| C34～37 | CQ92M1H123K | Mylar | 0.012μF | ±10% | | |
| C38 | CK45F1H223Z | Ceramic | 0.022μF | +80%−20% | | |
| C39 | CK45F1H473Z | Ceramic | 0.047μF | +80%−20% | | |
| C40 | CK45F1H103Z | Ceramic | 0.01μF | +80%−20% | | |
| **RESISTOR** | | | | | | |
| R1～4 | PD14CY2E473J | Carbon | 47kΩ | ±5% | 1/4W | |
| R5 | PD14CY2E102J | Carbon | 1kΩ | ±5% | 1/4W | |
| R6～9 | PD14CY2E104J | Carbon | 100kΩ | ±5% | 1/4W | |
| R10 | PD14CY2E101J | Carbon | 100Ω | ±5% | 1/4W | |
| R11 | PD14CY2E333J | Carbon | 33kΩ | ±5% | 1/4W | |
| R12 | PD14CY2E473J | Carbon | 47Ω | ±5% | 1/4W | |
| R13 | PD14CY2E101J | Carbon | 100Ω | ±5% | 1/4W | |
| R14 | PD14CY2E102J | Carbon | 1kΩ | ±5% | 1/4W | |
| R15 | PD14CY2E101J | Carbon | 100Ω | ±5% | 1/4W | |
| R16 | PD14CY2E472J | Carbon | 4.7Ω | ±5% | 1/4W | |
| R17 | PD14CY2E473J | Carbon | 47kΩ | ±5% | 1/4W | |
| R18 | PD14CY2E563J | Carbon | 56kΩ | ±5% | 1/4W | |
| R19 | PD14CY2E334J | Carbon | 330kΩ | ±5% | 1/4W | |
| R20 | PD14CY2E102J | Carbon | 1kΩ | ±5% | 1/4W | |
| R21 | PD14CY2E562J | Carbon | 5.6kΩ | ±5% | 1/4W | |
| R22 | PD14CY2E683J | Carbon | 68kΩ | ±5% | 1/4W | |
| R23 | PD14CY2E222J | Carbon | 2.2kΩ | ±5% | 1/4W | |
| R24 | PD14CY2E102J | Carbon | 1kΩ | ±5% | 1/4W | |
| R25 | PD14CY2E103J | Carbon | 10kΩ | ±5% | 1/4W | |
| R26 | PD14CY2E153J | Carbon | 15kΩ | ±5% | 1/4W | |
| R27 | PD14CY2E472J | Carbon | 4.7kΩ | ±5% | 1/4W | |

# PARTS LIST

| Ref. No. | Parts No. | Description | Re-marks |
|---|---|---|---|
| R28 | PD14CY2E102J | Carbon 1kΩ ±5% 1/4W | |
| R29 | PD14CY2E472J | Carbon 4.7kΩ ±5% 1/4W | |
| R30 | PD14CY2E471J | Carbon 470Ω ±5% 1/4W | |
| R31 | PD14CY2E4R7J | Carbon 4.7Ω ±5% 1/4W | |
| R32 | PD14CY2E472J | Carbon 4.7kΩ ±5% 1/4W | |
| R33 | PD14CY2E103J | Carbon 10kΩ ±5% 1/4W | |
| R34 | PD14CY2E471J | Carbon 470Ω ±5% 1/4W | |
| R35 | PD14CY2E104J | Carbon 100kΩ ±5% 1/4W | |
| R36 | PD14CY2E223J | Carbon 22kΩ ±5% 1/4W | |
| R37 | PD14CY2E334J | Carbon 330kΩ ±5% 1/4W | |
| R38 | PD14CY2E472J | Carbon 4.7kΩ ±5% 1/4W | |
| R39 | PD14CY2E474J | Carbon 470kΩ ±5% 1/4W | |
| R40 | PD14CY2E274J | Carbon 270kΩ ±5% 1/4W | |
| R41 | PD14CY2E223J | Carbon 22kΩ ±5% 1/4W | |
| R42 | PD14CY2E102J | Carbon 1kΩ ±5% 1/4W | |
| R43 | PD14CY2E105J | Carbon 1MΩ ±5% 1/4W | |
| R44 | PD14CY2E104J | Carbon 100kΩ ±5% 1/4W | |
| R45,46 | PD14CY2E103J | Carbon 10kΩ ±5% 1/4W | |
| R47 | PD14CY2E124J | Carbon 120kΩ ±5% 1/4W | |
| R48 | PD14CY2E103J | Carbon 10kΩ ±5% 1/4W | |
| R49 | PD14CY2E103J | Carbon 10kΩ ±5% 1/4W | |
| **SEMICONDUCTOR** | | | |
| Q1 | V09-0012-05 | FET 2SK19(GR) | |
| Q2,3 | V03-0079-05 | Transistor 2SC460(B) | |
| Q4,5 | V03-0123-05 | Transistor 2SC733(Y) | |
| Q6 | V01-0032-05 | Transistor SA562(Y) | |
| Q7,8 | V03-0123-05 | Transistor 2SC733(Y) | |
| Q9 | V01-0032-05 | Transistor 2SA562(Y) | |
| Q10～12 | V03-0123-05 | Transistor 2SC733(Y) | |
| Q13 | V03-0241-05 | Transistor 2SC735(Y) | |
| D1～4 | V11-0370-05 | Diode 1S1587 | |
| D5,6 | V11-0293-05 | Vari-cap diode 1S1658-3 | |
| D7,8 | V11-0051-05 | Diode 1N60 | |
| D9,10 | V11-0076-05 | Diode 1S1555 | |
| D11～15 | V11-0051-05 | Diode 1N60 | |
| D16 | V11-0076-05 | Diode 1S1555 | |
| D17 | V11-0051-05 | Diode 1N60 | |
| D18 | V11-0297-05 | Zener diode WZ-13 | |
| D19～23 | V11-0076-05 | Diode 1S1555 | |
| D24 | V11-0297-05 | Zener diode WZ-061 | |
| D25 | V11-0076-05 | Diode 1S1555 | |
| **TRANSFORMER** | | | |
| T1 | L13-0001-05 | Input transformer | |
| T2 | L12-0013-05 | Oscillation transformer | |
| **TRIMMER** | | | |
| TC1～4 | C05-0030-15 | Ceramic trimmer 20pF | |
| **MICELLANEOUS** | | | |
| | E18-0401-05 | Crystal quarts socket | |
| FIX1 | E40-1413-05 | Mini-connector | |
| FIX2 | E40-0613-05 | Mini-connector | |
| FIX3 | E40-1413-05 | Mini-connector | |

| Ref. No | Parts No. | Description | Re-marks |
|---|---|---|---|
| C2 | CC45CH1H151J | Ceramic 150pF ±5% | |
| C3 | CC45CH1H101J | Ceramic 100pF ±5% | |
| C4 | CC45CH1H330J | Ceramic 33pF ±5% | |
| C5 | CK45F1H473Z | Ceramic 0.047μF +80%−20% | |
| C6 | CC45CH1H390J | Ceramic 39pF ±5% | |
| C7 | CC45CH1H330J | Ceramic 33pF ±5% | |
| C8 | CC45SL1H101J | Ceramic 100pF ±5% | |
| C9 | CC45SL1H221K | Ceramic 220pF ±10% | |
| C10 | CC94SL1H470K | Ceramic 47pF ±10% | |
| C11 | CC94SL2H050D | Ceramic 5pF ±0.5pF | |
| C12 | CK45F1H473Z | Ceramic 0.047μF +80%−20% | |
| C13 | CC45CH1H470J | Ceramic 47pF ±5% | |
| **RESISTOR** | | | |
| R1 | PD14CY2E473J | Carbon 47kΩ ±5% 1/4W | |
| R2 | PD14CY2E103J | Carbon 10kΩ ±5% 1/4W | |
| R3 | PD14CY2E101J | Carbon 100Ω ±5% 1/4W | |
| R4 | PD14CY2E473J | Carbon 47kΩ ±5% 1/4W | |
| R5 | PD14CY2E472J | Carbon 4.7kΩ ±5% 1/4W | |
| R6 | PD14CY2E224J | Carbon 220kΩ ±5% 1/4W | |
| R7 | PD14CY2E105J | Carbon 1MΩ ±5% 1/4W | |
| R8～10 | PD14CY2E472J | Carbon 4.7kΩ ±5% 1/4W | |
| **SEMICONDUCTOR** | | | |
| Q1～4 | V03-0042-05 | Transistor 2SC373 | |
| D1 | V11-0051-05 | Diode IN60 | |
| **COIL/TRIMMER** | | | |
| L1 | L40-1235-05 | Ferri inductor | |
| TC | C05-0029-05 | Ceramic trimmer 50pF | |
| **CRYSTAL QUARTZ** | | | |
| X1 | L77-0009-05 | Crystal quartz | |
| **MISCELLANEOUS** | | | |
| — | E18-0401-05 | Socket (Crystal) | |
| — | E23-0005-04 | Terminal × 6 | |

## INDICATOR (X54-1180-00)

| Ref. No. | Parts No. | Description | Re-marks |
|---|---|---|---|
| **RESISTOR** | | | |
| R1 | PD14BY2E471J | Carbon 470Ω ±5% 1/4W | |
| R2 | PD14BY2E681J | Carbon 680Ω ±5% 1/4W | |
| **SEMICONDUCTOR** | | | |
| D～4 | V11-0430-05 | LED SEL-103W | |
| **MISCELLANEOUS** | | | |
| J1 | R92-0150-05 | Short jamper | |
| | E23-0040-04 | Terminal × 3 | |
| | F20-0501-04 | Insulator × 2 | |

## MARKER (X52-0005-01)

| Ref. No | Parts No. | Description | Re-marks |
|---|---|---|---|
| **CAPACITOR** | | | |
| C1 | CM93M1H103K | Mylar 0.01μF ±10% | |

## VOX-VR (X54-1190-00)

| Ref. No. | Parts No | | Re-marks |
|---|---|---|---|
| **CAPACITOR** | | | |
| C1 | CK45F1H103Z | Ceramic 0.01μF +80%−20% | |

# PARTS LIST

| Ref. No. | Parts No. | Description | Remarks |
|---|---|---|---|
| | | **POTENTIOMETER** | |
| VR1 | R01-6013-05 | 250kΩ(B) VOX DELAY | |
| VR2 | R01-0043-05 | 300Ω(B) ANTI VOX | |
| VR3 | R01-4025-05 | 50kΩ(B) VOX GAIN | |
| | | **MISCELLANEOUS** | |
| — | E23-0046-04 | Terminal (square) × 8 | |

## FINAL (X56-1200-00)

| Ref. No. | Parts No. | Description | Remarks |
|---|---|---|---|
| | | **CAPACITOR** | |
| C1 | CC45SL2H101J | Ceramic 100pF ±5% | |
| C2 | CK45E2H102P | Ceramic 0.001μF +100%, −0% | |
| C3～10 | CK45F1H473Z | Ceramic 0.047μF +80% − 20% | |
| C11～13 | CK45E2H103P | Ceramic 0.01μF +100% − 0% | |
| C14 | CK45F1H103Z | Ceramic 0.01μF +80% − 20% | |
| | | **RESISTOR** | |
| R1 | PD14BY2E101J | Carbon 100Ω ±5% 1/4W | |
| R2,3 | RC05GF3A100J | Carbon 10Ω ±5% 1W | |
| R4 | PD14BY2E332J | Carbon 3.3kΩ ±5% 1/4W | |
| R5,6 | RC05GF2H101J | Carbon 100Ω ±5% 1/2W | |
| | | **COIL** | |
| L1 | L40-1511-03 | Ferri-inductor 150μH | |
| L2 | L40-4711-03 | Ferri-inductor 470μH | |
| L3,4 | L40-1511-03 | Ferri-inductor 150μH | |
| PS1,2 | L33-0010-05 | Parastic supressor | |
| | | **MISCELLANEOUS** | |
| V1,2 | E01-0801-05 | US socket | |
| — | E23-0047-04 | Terminal (square) × 9 | |

## CAR ASS'Y (X60-1000-00)

| Ref. No. | Parts No. | Description | Remarks |
|---|---|---|---|
| — | E40-1025-05 | Chassis mount wafer | |
| — | F11-0235-03 | CAR shield box | |
| — | F11-0236-04 | CAR shield box cover (upper) | |
| — | F11-0237-14 | CAR shield box cover (lower) | |
| — | J32-0216-04 | Hexagonal boss × 2 (long) | |
| — | J32-0217-04 | Hexagonal boss × 3 (medium) | |
| — | J32-0217-04 | Hexagonal boss × 3 (short) | |
| — | X50-1310-00 | CAR-1 unit | |
| — | X50-1320-00 | CAR-2 unit | |

## CAR-1 (X50-1310-00)

| Ref. No. | Parts No. | Description | Remarks |
|---|---|---|---|
| | | **CAPACITOR** | |
| C1 | CK45F1H103Z | Ceramic 1μF +80% − 20% | |
| C2 | CC45UJ1H180J | Ceramic 18pF ±5% | |
| C3 | CC45UJ1H330J | Ceramic 33pF ±5% | |
| C4 | CK45D1H102M | Ceramic 0.001μF ±20% | |
| C5 | CC45UJ1H180J | Ceramic 18pF ±5% | |
| C6 | CK45F1H103Z | Ceramic 0.01μF +80% − 20% | |
| C7 | CC45TH1H030C | Ceramic 3pF ±0.25pF | |
| C8 | CS15E1VR22M | Tantalum 0.22μF ±20% | |
| C9 | CK45F1H103Z | Ceramic 0.01μF +80% − 20% | |
| C10 | CK45B1H471K | Ceramic 470pF ±10% | |
| C11 | CC45SL1H101J | Ceramic 100pF ±5% | |
| C12 | CC45CH1H020C | Ceramic 2pF ±0.25pF | |
| C13 | CC45CH1H270J | Ceramic 27pF ±5% | |
| C14 | C90-0262-05 | Ceramic 0.047μF 25WV | |
| C15 | CK45F1H103Z | Ceramic 0.01μF +80% − 20% | |
| C16 | CC45SL1H151K | Ceramic 150pF ±10% | |
| C17,18 | CK45F1H223Z | Ceramic 0.022μF +80% − 20% | |
| | | **RESISTOR** | |
| R1,2 | PD14CY2B331J | Carbon 330Ω ±5% 1/8W | |
| R3 | PD14CY2B473J | Carbon 47kΩ ±5% 1/8W | |
| R4 | PD14CY2B272J | Carbon 2.7kΩ ±5% 1/8W | |
| R5,6 | PD14CY2B473J | Carbon 47kΩ ±5% 1/8W | |
| R7,8 | PD14CY2B152J | Carbon 1.5kΩ ±5% 1/8W | |
| R9 | PD14CY2B153J | Carbon 15kΩ ±5% 1/8W | |
| R10 | PD14CY2B333J | Carbon 33kΩ ±5% 1/8W | |
| R11 | PD14CY2B682J | Carbon 6.8kΩ ±5% 1/8W | |
| R12 | PD14CY2B102J | Carbon 1kΩ ±5% 1/8W | |
| R13 | PD14CY2B823J | Carbon 82kΩ ±5% 1/8W | |
| R14 | PD14CY2B333J | Carbon 33kΩ ±5% 1/8W | |
| R15 | PD14CY2B102J | Carbon 1kΩ ±5% 1/8W | |
| R16 | PD14CY2B101J | Carbon 100Ω ±5% 1/8W | |
| R17 | PD14CY2B331J | Carbon 330Ω ±5% 1/8W | |
| | | **SEMICONDUCTOR** | |
| Q1,2 | V03-0079-05 | Transistor 2SC460(B) | |
| Q3 | V03-0241-05 | Transistor 2SC735(Y) | |
| D1～4 | V11-0076-05 | Diode 1S1555 | |
| D5 | V11-0432-05 | Diode 1TT310 | |
| | | **POTENTIOMETER** | |
| VR1 | R12-1012-05 | 1kΩ | |
| | | **COIL/TRIMMER** | |
| L1～4 | L40-1511-03 | Ferri-indicator 150μH | |
| L5 | L33-0266-05 | Choke coil 28μH | |
| L6～8 | L40-1511-03 | Ferri-indicator 150μH | |
| T1 | L32-0201-05 | Oscillating coil | |
| TC1,2 | C05-0049-05 | Trimmer 20pF | |
| | | **CRYSTAL QUARTZ** | |
| X1 | L77-0486-05 | 8828.5kHz LSB | |
| X2 | L77-0485-05 | 8831.5kHz USB | |
| | | **MISCELLANEOUS** | |
| J1 | R92-0501-05 | Short jamper | |
| — | E23-0046-04 | Terminal (square) | |
| CJ1 | E40-0427-05 | Type U pin wafer | |
| CJ2 | E40-0726-05 | Type U pin wafer | |
| CJ3 | E40-0826-05 | Type U pin wafer | |
| — | E40-1007-05 | Counter | |

## CAR-2 (X50-1320-00)

| Ref. No. | Parts No. | Description | Remarks |
|---|---|---|---|
| | | **CAPACITOR** | |
| C1 | CL45F1H103Z | Ceramic 0.01μF +80% − 20% | |

# PARTS LIST

| Ref. No | Parts No. | Description | | | | Re-marks |
|---|---|---|---|---|---|---|
| C2 | CC45CH1H180J | Ceramic | 18pF | ±5% | | |
| C4 | CK45F1H103Z | Ceramic | 0.01μF | +80%−20% | | |
| C6 | CK45F1H103Z | Ceramic | 0.01μF | +80%−20% | | |
| C7 | CK45B1H471K | Ceramic | 470pF | ±10% | | |
| C8 | CC45SL1H101J | Ceramic | 100pF | ±5% | | |
| C9 | CC45SL1H020C | Ceramic | 2pF | ±0.25pF | | |
| C10 | CC45CH1H330J | Ceramic | 33pF | ±5% | | |
| C11 | C90-0262-05 | Ceramic | 0.047μF | | | |
| C12,13 | CK45F1H103Z | Ceramic | 0.01μF | +80%−20% | | |
| C14 | CC45SL1H150J | Ceramic | 15pF | ±5% | | |
| C15 | CC45SL1H221K | Ceramic | 220pF | ±10% | | |
| C16 | CC45SL1H100D | Ceramic | 10pF | ±0.5pF | | |
| C17 | C90-0262-05 | Ceramic | 0.047μF | | | |
| C18 | CC45CH1H050D | Ceramic | 5pF | ±0.25pF | | |
| C19 | C90-0262-05 | Ceramic | 0.047μF | | | |
| **RESISTOR** | | | | | | |
| R1,2 | PD14CY2E392J | Carbon | 3.9kΩ | ±5% | 1/4W | |
| R3 | PD14CY2E333J | Carbon | 33Ω | ±5% | 1/4W | |
| R4 | PD14CY2E682J | Carbon | 6.8kΩ | ±5% | 1/4W | |
| R5 | PD14CY2E333J | Carbon | 33kΩ | ±5% | 1/4W | |
| R6 | PD14CY2E102J | Carbon | 1kΩ | ±5% | 1/4W | |
| R7 | PD14CY2E683J | Carbon | 68kΩ | ±5% | 1/4W | |
| R8 | PD14CY2E101J | Carbon | 100Ω | ±5% | 1/4W | |
| R9 | PD14CY2E561J | Carbon | 560Ω | ±5% | 1/4W | |
| R10 | PD14CY2E472J | Carbon | 4.7kΩ | ±5% | 1/4W | |
| R11 | PD14CY2E332J | Carbon | 3.3kΩ | ±5% | 1/4W | |
| R12 | PD14CY2E101J | Carbon | 100Ω | ±5% | 1/4W | |
| **SEMICONDUCTOR** | | | | | | |
| Q1～3 | V03-0079-05 | Transistor | 2SC460(B) | | | |
| D1,2 | V11-0076-05 | Diode | 1S1555 | | | |
| D3～5 | V11-0051-05 | Diode | 1N60 | | | |
| D6,7 | V11-0076-05 | Diode | 1S1555 | | | |
| D8,9 | V11-0414-05 | Diode | 1S2588 | | | |
| **COIL** | | | | | | |
| L1～12 | L40-1511-03 | Ferri-inductor | 150μH | | | |
| T1 | L32-0201-05 | Oscillating coil | | | | |
| TC1,2 | C05-0010-15 | Trimmer | 10pF | | | |
| TC3 | C05-0013-05 | Trimmer | 20pF | | | |
| **CRYSTAL QUARTZ** | | | | | | |
| X1 | L77-0487-05 | 8830.7kHz | | | | |
| **MISCELLANEOUS** | | | | | | |
| — | E23-0046-04 | Terminal (square) | | | | |
| — | E40-1007-05 | Connector | | | | |

## PLL ASS'Y (X60-1010-00)

| Ref. No | Parts No. | Description | Re-marks |
|---|---|---|---|
| — | E40-0625-05 | Chassis mount wafer × 2 | |
| — | E40-0825-05 | Chassis mount wafer | |
| — | F11-0239-03 | PLL shield box | |
| — | F11-0240-14 | PLL shield cover (upper) | |
| — | F11-0241-24 | PLL shield cover (lower) | |
| — | J32-0216-04 | Hexagonal boss × 4 | |
| — | J32-0217-04 | Hexagonal boss × 5 | |
| — | J32-0218-04 | Hexagonal boss × 6 | |
| — | X50-1330-00 | VCO unit | |
| — | X50-1340-00 | PD unit | |

## VCO (X50-1330-00)

| Ref. No. | Parts No. | Description | | | Re-marks |
|---|---|---|---|---|---|
| **CAPACITOR** | | | | | |
| C1 | CC45TH1H180J | Ceramic | 18pF | ±5% | |
| C2 | CC45TH1H220J | Ceramic | 22pF | ±5% | |
| C3 | CC45TH1H270J | Ceramic | 27pF | ±5% | |
| C4 | CC45TH1H150J | Ceramic | 15pF | ±5% | |
| C5 | CK45F1H103Z | Ceramic | 0.01μF | +80%−20% | |
| C6 | CC45F1H103Z | Ceramic | 0.01μF | +80%−20% | |
| C7 | CC45TH1H470J | Ceramic | 47pF | ±5% | |
| C8,9 | CC45RH1H220J | Ceramic | 22pF | ±5% | |
| C10 | CC45RH1H330J | Ceramic | 33pF | ±5% | |
| C11 | CK45F1H103Z | Ceramic | 0.01μF | +80%−20% | |
| C12 | CC45RH1H150J | Ceramic | 15pF | ±5% | |
| C13 | CC45TH1H330J | Ceramic | 33pF | ±5% | |
| C14 | CC45RH1H180J | Ceramic | 18pF | ±5% | |
| C15 | CC45RK1H220J | Ceramic | 22pF | ±5% | |
| C16 | CC45RH1H270J | Ceramic | 27pF | ±5% | |
| C17 | CK45F1H103Z | Ceramic | 0.01μF | +80%−20% | |
| C18 | CC45RH1H100D | Ceramic | 10pF | ±0.5pF | |
| C19 | CC45TH1H270J | Ceramic | 27pF | ±5% | |
| C20 | CC45SH1H180J | Ceramic | 18pF | ±5% | |
| C21 | CC45SH1H220J | Ceramic | 22pF | ±5% | |
| C22 | CC45SH1H150J | Ceramic | 15pF | ±5% | |
| C23 | CK45F1H103Z | Ceramic | 0.01μF | +80%−20% | |
| C24 | CC45TH1H180J | Ceramic | 18pF | ±5% | |
| C25 | CC45TH1H220J | Ceramic | 22pF | ±5% | |
| C26 | CC45TH1H270J | Ceramic | 27pF | ±5% | |
| C27 | CC45TH1H150J | Ceramic | 15pF | ±5% | |
| C28 | CK45F1H103Z | Ceramic | 0.01μF | +80%−20% | |
| C29 | CC45RH1H020C | Ceramic | 2pF | ±0.25pF | |
| C30 | CC45TH1H180J | Ceramic | 18pF | ±5% | |
| C31 | CC45RH1H270J | Ceramic | 27pF | ±5% | |
| C32 | CC45RH1H150J | Ceramic | 15pF | ±5% | |
| C33 | CC45RH1H330J | Ceramic | 33pF | ±5% | |
| C34 | CK45F1H103Z | Ceramic | 0.01μF | +80%−20% | |
| C35 | CC45TH1H180J | Ceramic | 18pF | ±5% | |
| C36 | CC45SH1H680J | Ceramic | 68pF | ±5% | |
| C37 | CC45SH1H470J | Ceramic | 47pF | ±5% | |
| C38 | CC45SH1H560J | Ceramic | 56pF | ±5% | |
| C39 | CK45F1H103Z | Ceramic | 0.01μF | +80%−20% | |
| C40 | CC45TH1H180J | Ceramic | 18pF | ±5% | |
| C41 | CC45SH1H680J | Ceramic | 68pF | ±5% | |
| C42 | CC45SH1H470J | Ceramic | 47pF | ±5% | |
| C43 | CC45SH1H560J | Ceramic | 56pF | ±5% | |
| C44 | CK45F1H103Z | Ceramic | 0.01μF | +80%−20% | |
| C45 | CC45TH1H180J | Ceramic | 18pF | ±5% | |
| C46 | CC45SH1H680J | Ceramic | 68pF | ±5% | |
| C47 | CC45SH1H470J | Ceramic | 47pF | ±5% | |
| C48 | CC45SH1H560J | Ceramic | 56pF | ±5% | |
| C49 | CK45F1H103Z | Ceramic | 0.01μF | ±5% | |
| C50 | CC45TH1H180J | Ceramic | 18pF | ±5% | |
| C51 | CC45SH1H680J | Ceramic | 68pF | ±5% | |
| C52 | CC45SH1H470J | Ceramic | 47pF | ±5% | |
| C53 | CC45SH1H560J | Ceramic | 56pF | ±5% | |
| C54,55 | CK45F1H103Z | Ceramic | 0.01μF | +80%−20% | |
| C56 | CK45D1H102M | Ceramic | 0.001μF | ±20% | |
| C57 | CC45CH1H020C | Ceramic | 2pF | ±0.25pF | |
| C58 | CC45CH1H030C | Ceramic | 3pF | ±0.25pF | |
| C59 | CK45F1H103Z | Ceramic | 0.01μF | +80%−20% | |
| C60 | C90-0262-05 | Ceramic | 0.047μF | | |
| C61 | CK45D1H102M | Ceramic | 0.001μF | ±20% | |

# PARTS LIST

| Ref. No. | Parts No. | Description | | | | Re-marks |
|---|---|---|---|---|---|---|
| C62,63 | CC45SL1H120J | Ceramic | 12pF | ±5% | | |
| C64 | CC45SL1H220J | Ceramic | 22pF | ±5% | | |
| C65 | CC45CH1H150J | Ceramic | 15pF | ±5% | | |
| C66 | CK45F1H103Z | Ceramic | 0.01μF | +80%−20% | | |
| C67 | CC45CH1H030C | Ceramic | 3pF | ±0.25pF | | |
| C68 | CK45F1H103Z | Ceramic | 0.01μF | +80%−20% | | |
| C69 | CC45SL1H151J | Ceramic | 150pF | ±5% | | |
| C70,71 | C90-0262-05 | Ceramic | 0.047μF | | | |
| C72 | CS15E1A3R3M | Tantalum | 3.3μF | ±20% | | |
| C73 | CK45F1H103Z | Ceramic | 0.01μF | +80%−20% | | |
| C74 | CC45SL1H271J | Ceramic | 270pF | ±5% | | |
| C75 | CC45SL1H121J | Ceramic | 120pF | ±5% | | |
| C76~86 | CK45F1H103Z | Ceramic | 0.01μF | +80%−20% | | |
| C87 | CL45D1J102M | Ceramic | 0.001μF | ±20% | | |
| | | **RESISTOR** | | | | |
| R1 | PD14CY2B104J | Carbon | 100kΩ | ±5% | 1/8W | |
| R2 | PD14CY2B101J | Carbon | 100Ω | ±5% | 1/8W | |
| R3 | PD14CY2B330J | Carbon | 33Ω | ±5% | 1/8W | |
| R4 | PD14CY2B104J | Carbon | 100kΩ | ±5% | 1/8W | |
| R5 | PD14CY2B101J | Carbon | 100Ω | ±5% | 1/8W | |
| R6 | PD14CY2B151J | Carbon | 150Ω | ±5% | 1/8W | |
| R7 | PD14CY2B104J | Carbon | 100kΩ | ±5% | 1/8W | |
| R8 | PD14CY2B101J | Carbon | 100Ω | ±5% | 1/8W | |
| R9 | PD14CY2B151J | Carbon | 150Ω | ±5% | 1/8W | |
| R10 | PD14CY2B104J | Carbon | 100kΩ | ±5% | 1/8W | |
| R11,12 | PD14CY2B101J | Carbon | 100Ω | ±5% | 1/8W | |
| R13 | PD14CY2B104J | Carbon | 100kΩ | ±5% | 1/8W | |
| R14 | PD14CY2B101J | Carbon | 100Ω | ±5% | 1/8W | |
| R15 | PD14CY2B330J | Carbon | 33Ω | ±5% | 1/8W | |
| R16 | PD14CY2B104J | Carbon | 100kΩ | ±5% | 1/8W | |
| R17 | PD14CY2B101J | Carbon | 100Ω | ±5% | 1/8W | |
| R18 | PD14CY2B104J | Carbon | 100kΩ | ±5% | 1/8W | |
| R19 | PD14CY2B101J | Carbon | 100Ω | ±5% | 1/8W | |
| R20 | PD14CY2B104J | Carbon | 100kΩ | ±5% | 1/8W | |
| R21 | PD14CY2B101J | Carbon | 100Ω | ±5% | 1/8W | |
| R22 | PD14CY2B104J | Carbon | 100kΩ | ±5% | 1/8W | |
| R23 | PD14CY2B101J | Carbon | 100Ω | ±5% | 1/8W | |
| R24 | PD14CY2B104J | Carbon | 100kΩ | ±5% | 1/8W | |
| R25 | PD14CY2B101J | Carbon | 100Ω | ±5% | 1/8W | |
| R26 | PD14CY2B104J | Carbon | 100kΩ | ±5% | 1/8W | |
| R27 | PD14CY2B101J | Carbon | 100Ω | ±5% | 1/8W | |
| R28 | PD14CY2B470J | Carbon | 47Ω | ±5% | 1/8W | |
| R29 | PD14CY2B391J | Carbon | 390Ω | ±5% | 1/8W | |
| R30 | PD14CY2B104J | Carbon | 100kΩ | ±5% | 1/8W | |
| R31 | PD14CY2B333J | Carbon | 33kΩ | ±5% | 1/8W | |
| R32 | PD14CY2B330J | Carbon | 33Ω | ±5% | 1/8W | |
| R33 | PD14CY2B123J | Carbon | 12kΩ | ±5% | 1/8W | |
| R34 | PD14CY2B103J | Carbon | 10kΩ | ±5% | 1/8W | |
| R35 | PD14CY2B221J | Carbon | 220Ω | ±5% | 1/8W | |
| R36 | PD14CY2B393J | Carbon | 390Ω | ±5% | 1/8W | |
| R37 | PD14CY2B473J | Carbon | 47kΩ | ±5% | 1/8W | |
| R38 | PD14CY2B331J | Carbon | 330Ω | ±5% | 1/8W | |
| R39 | PD14CY2B330J | Carbon | 33Ω | ±5% | 1/8W | |
| R40 | PD14CY2B681J | Carbon | 680Ω | ±5% | 1/8W | |
| R41 | PD14CY2B470J | Carbon | 47Ω | ±5% | 1/8W | |
| R42 | PD14CY2B102J | Carbon | 1kΩ | ±5% | 1/8W | |
| R43 | PD14CY2B101J | Carbon | 100Ω | ±5% | 1/8W | |
| R44 | PD14CY2B822J | Carbon | 8.2kΩ | ±5% | 1/8W | |
| R45 | PD14CY2B332J | Carbon | 3.3kΩ | ±5% | 1/8W | |
| R46 | PD14CY2B122J | Carbon | 1.2kΩ | ±5% | 1/8W | |
| R47 | PD14CY2B103J | Carbon | 10kΩ | ±5% | 1/8W | |
| R48 | PD14CY2B330J | Carbon | 33Ω | ±5% | 1/8W | |

| Ref. No. | Parts No. | Description | | Re-marks |
|---|---|---|---|---|
| | | **SEMICONDUCTOR** | | |
| Q1~6 | V09-0012-05 | FET | 2SK19(GR) | |
| Q7~11 | V09-0013-05 | FET | 2SK19(BL) | |
| Q12 | V09-0057-05 | FET | 3SK41(L) | |
| Q13 | V03-0079-05 | Transistor | 2SC460(B) | |
| Q14 | V03-0283-05 | Transistor | 2SC741 | |
| Q15 | V03-0124-05 | Transistor | 2SC734(Y) | |
| D1~12 | V11-0414-05 | Diode | 1S2588 | |
| D13~23 | V11-0293-05 | Diode | 1S1658-3 | |
| | | **COIL** | | |
| L1~15 | L40-1511-02 | Ferri-inductor | 150μH | |
| L16 | L40-1592-02 | Ferri-inductor | 1.5μH | |
| L17~18 | L40-1092-02 | Ferri-inductor | 1μH | |
| L20 | L40-1292-02 | Ferri-inductor | 1.2μH | |
| L21 | L40-1511-03 | Ferri-inductor | 150μH | |
| L22 | L40-1292-02 | Ferri-inductor | 1.2μH | |
| L23 | L40-1511-03 | Ferri-inductor | 150μH | |
| T1 | L32-0199-05 | Oscillating coil | 15MHz | |
| T2,3 | L32-0193-05 | Oscillating coil | 1.8MHz, 3.5MHz | |
| T4 | L32-0195-05 | Oscillating coil | 7MHz | |
| T5 | L32-0196-05 | Oscillating coil | 14MHz | |
| T6 | L32-0197-05 | Oscillating coil | 21MHz | |
| T7~10 | L32-0198-05 | Oscillating coil | 28MHz | |
| T12 | L34-0529-05 | Trap coil | 8.83MHz | |
| | | **SWITCH** | | |
| S1 | S31-1005-05 | Slide switch | | |
| | | **MISCELLANEOUS** | | |
| J1~6 | R92-0150-05 | Short jamper × 6 | | |
| | E23-0046-04 | Terminal (square) × 6 | | |
| | E40-0607-05 | Connector × 2 | 6p | |
| | E40-0807-05 | Connector | 8p | |

## PD (X50-1340-00)

| Ref. No. | Parts No. | Description | | | Re-marks |
|---|---|---|---|---|---|
| | | **CAPACITOR** | | | |
| C1,2 | CC45SL1H100D | Ceramic | 10pF | ±0.5pF | |
| C3 | CK45F1H103Z | Ceramic | 0.01μF | +80%−20% | |
| C4 | CK45F1H223Z | Ceramic | 0.022μF | +80%−20% | |
| C5,6 | CK45F1H103Z | Ceramic | 0.01μF | +80%−20% | |
| C7 | CE04W1A101 | Electrolytic | 100μF | 10WV | |
| C8 | CK45F1H103Z | Ceramic | 0.01μF | +80%−20% | |
| C9,10 | CK45F1H223Z | Ceramic | 0.022μF | +80%−20% | |
| C12 | CK45F1H223Z | Ceramic | 0.022μF | +80%−20% | |
| C13 | CE04W1A101 | Electrolytic | 100μF | 10WV | |
| C14,15 | CS15E1VR22M | Tantalum | 0.22μF | ±20% | |
| C16 | CC45SL1H470J | Ceramic | 47pF | ±5% | |
| C17 | CK450D1H102M | Ceramic | 0.001μF | ±20% | |
| C18,19 | CK45F1H103Z | Ceramic | 0.01μF | +80%−20% | |
| C20 | CC45RH1H101J | Ceramic | 100pF | ±5% | |
| C21 | CQ09S1H391J | Ceramic | 390pF | ±5% | |
| C22 | CC45RH1H101J | Ceramic | 100pF | ±5% | |
| C23 | C90-0262-05 | Ceramic | 0.047μF | | |
| C24,25 | CK45F1H223Z | Ceramic | 0.022μF | +80%−20% | |
| C26 | CS15E1V010M | Tantalum | 1μF | ±20% | |
| C27 | CC45SL1H050C | Ceramic | 5pF | ±0.25pF | |
| C28 | CC45SL1H100D | Ceramic | 10pF | ±0.5pF | |
| C29,30 | CC45SL1H330J | Ceramic | 33pF | ±5% | |

# PARTS LIST

| Ref. No. | Parts No. | Description | | | | Remarks |
|---|---|---|---|---|---|---|
| C31 | CC45SL1H100D | Ceramic | 10pF | ±0.5pF | | |
| C32 | CC45SL1H050C | Ceramic | 5pF | ±0.25pF | | |
| C33 | CK45D1H102M | Ceramic | 0.001μF | ±20% | | |
| C34,35 | CK45F1H223Z | Ceramic | 0.022μF | +80%−20% | | |
| C37 | CS15E1V010M | Tantalum | 1μF | ±20% | | |
| C38 | CC45CH1H470J | Ceramic | 47pF | ±5% | | |
| C39 | CC45CH1H470J | Ceramic | 47pF | ±5% | | |
| C40 | CC45SL1H151J | Ceramic | 150pF | ±5% | | |
| C41 | CK45F1H103Z | Ceramic | 0.01μF | +80%−20% | | |
| C42,43 | CC45SL1H331J | Ceramic | 330pF | ±5% | | |
| C44 | CK45F1H103Z | Ceramic | 0.01μF | +80%−20% | | |
| C45,46 | CC45SL1H331J | Ceramic | 330pF | ±5% | | |
| C47 | CK45F1H103Z | Ceramic | 0.01μF | +80%−20% | | |
| C48 | CC45SL1H151J | Ceramic | 150pF | ±5% | | |
| C49 | CC45SL1H221J | Ceramic | 220pF | ±5% | | |
| C50 | CL45F1H103Z | Ceramic | 0.01μF | +80%−20% | | |
| C51 | CC45CH1H470J | Ceramic | 47pF | ±5% | | |
| C52 | CC45SL1H151J | Ceramic | 150pF | ±5% | | |
| C53 | CK45F1H103Z | Ceramic | 0.01μF | +80%−20% | | |
| C54 | CC45CH1H100D | Ceramic | 10pF | ±0.5pF | | |
| C55 | CC45SL1H151J | Ceramic | 150pF | ±5% | | |
| C56 | CK45F1H103Z | Ceramic | 0.01μF | +80%−20% | | |
| C57 | CC45CH1H101J | Ceramic | 100pF | ±5% | | |
| C58 | CK45F1H103Z | Ceramic | 0.01μF | +80%−20% | | |
| C59 | CC45CH1H101J | Ceramic | 100pF | ±5% | | |
| C60 | CK45F1H103Z | Ceramic | 0.01μF | +80%−20% | | |
| C61 | CC45CH1H101J | Ceramic | 100pF | ±5% | | |
| C62 | CK45F1H103Z | Ceramic | 0.01μF | +80%−20% | | |
| C63 | CC45CH1H101J | Ceramic | 100pF | ±5% | | |
| C64,65 | CK45F1H103Z | Ceramic | 0.01μF | +80%−20% | | |
| C66 | CC45SL1H020C | Ceramic | 2pF | ±0.25pF | | |
| C67 | CC45SL1H180J | Ceramic | 18pF | ±5% | | |
| C68 | C90-0262-05 | Ceramic | 0.047μF | | | |
| C69 | CK45D1H102M | Ceramic | 0.001μF | +80%−20% | | |
| C70 | C90-0262-05 | Ceramic | 0.047μF | | | |
| C72 | CC45SL1H330J | Ceramic | 33pF | ±5% | | |
| **RESISTOR** | | | | | | |
| R1 | PD14CY2B151J | Carbon | 150Ω | ±5% | 1/8W | |
| R2 | PD14CY2B331J | Carbon | 330Ω | ±5% | 1/8W | |
| R3 | PD14CY2B391J | Carbon | 390Ω | ±5% | 1/8W | |
| R4 | PD14CY2B472J | Carbon | 4.7Ω | ±5% | 1/8W | |
| R5 | PD14CY2B183J | Carbon | 18kΩ | ±5% | 1/8W | |
| R6 | PD14CY2B472J | Carbon | 4.7kΩ | ±5% | 1/8W | |
| R7 | PD14CY2B562J | Carbon | 5.6kΩ | ±5% | 1/8W | |
| R8 | PD14CY2B391J | Carbon | 390Ω | ±5% | 1/8W | |
| R9 | PD14CY2B332J | Carbon | 3.3kΩ | ±5% | 1/8W | |
| R11 | PD14CY2B183J | Carbon | 18Ω | ±5% | 1/8W | |
| R12 | PD14CY2B472J | Carbon | 4.7Ω | ±5% | 1/8W | |
| R13,14 | PD14CY2B332J | Carbon | 3.3Ω | ±5% | 1/8W | |
| R15 | PD14CY2B102J | Carbon | 1kΩ | ±5% | 1/8W | |
| R16 | PD14CY2B222J | Carbon | 2.2kΩ | ±5% | 1/8W | |
| R17 | PD14CY2B102J | Carbon | 1kΩ | ±5% | 1/8W | |
| R18 | PD14CY2B821J | Carbon | 820Ω | ±5% | 1/8W | |
| R19 | PD14CY2B472J | Carbon | 4.7kΩ | ±5% | 1/8W | |
| R20 | PD14CY2B472J | Carbon | 4.7kΩ | ±5% | 1/8W | |
| R21 | PD14CY2B182J | Carbon | 1.8kΩ | ±5% | 1/8W | |
| R22 | PD14CY2B561J | Carbon | 560Ω | ±5% | 1/8W | |
| R24 | PD14CY2B102J | Carbon | 1kΩ | ±5% | 1/8W | |
| R25 | PD14CY2B101J | Carbon | 100Ω | ±5% | 1/8W | |
| R26 | PD14CY2B103J | Carbon | 10kΩ | ±5% | 1/8W | |
| R27 | PD14CY2B471J | Carbon | 470Ω | ±5% | 1/8W | |
| R28 | PD14CY2B122J | Carbon | 1.2kΩ | ±5% | 1/8W | |

| Ref. No. | Parts No. | Description | | | | Remarks |
|---|---|---|---|---|---|---|
| R29 | PD14CY2B471J | Carbon | 470Ω | ±5% | 1/8W | |
| R30,31 | PD14CY2B470J | Carbon | 47Ω | ±5% | 1/8W | |
| R32～34 | PD14CY2B102J | Carbon | 1kΩ | ±5% | 1/8W | |
| R35 | PD14CY2B821J | Carbon | 820Ω | ±5% | 1/8W | |
| R36 | PD14CY2B101J | Carbon | 100Ω | ±5% | 1/8W | |
| R37 | PD14CY2B152J | Carbon | 1.5kΩ | ±5% | 1/8W | |
| R38 | PD14CY2B103J | Carbon | 10kΩ | ±5% | 1/8W | |
| R39 | PD14CY2B152J | Carbon | 1.5kΩ | ±5% | 1/8W | |
| R40 | PD14CY2B471J | Carbon | 470Ω | ±5% | 1/8W | |
| R41 | PD14CY2B122J | Carbon | 1.2kΩ | ±5% | 1/8W | |
| R42,43 | PD14CY2B470J | Carbon | 47Ω | ±5% | 1/8W | |
| R44 | PD14CY2B471J | Carbon | 470Ω | ±5% | 1/8W | |
| R45 | PD14CY2B102J | Carbon | 1kΩ | ±5% | 1/8W | |
| R46,47 | PD14CY2B471J | Carbon | 470Ω | ±5% | 1/8W | |
| R48 | PD14CY2B472J | Carbon | 4.7kΩ | ±5% | 1/8W | |
| R49 | PD14CY2B272J | Carbon | 2.7kΩ | ±5% | 1/8W | |
| R50 | PD14CY2B101J | Carbon | 100Ω | ±5% | 1/8W | |
| R51 | PD14CY2B393J | Carbon | 39kΩ | ±5% | 1/8W | |
| R52 | PD14CY2B562J | Carbon | 5.6kΩ | ±5% | 1/8W | |
| R53 | PD14CY2B101J | Carbon | 100Ω | ±5% | 1/8W | |
| R54 | PD14CY2B473J | Carbon | 47kΩ | ±5% | 1/8W | |
| R55 | PD14CY2B562J | Carbon | 5.6kΩ | ±5% | 1/8W | |
| R56 | PD14CY2B101J | Carbon | 100Ω | ±5% | 1/8W | |
| R57 | PD14CY2B273J | Carbon | 27kΩ | ±5% | 1/8W | |
| R58 | PD14CY2B562J | Carbon | 5.6kΩ | ±5% | 1/8W | |
| R59 | PD14CY2B101J | Carbon | 100Ω | ±5% | 1/8W | |
| R60 | PD14CY2B472J | Carbon | 4.7kΩ | ±5% | 1/8W | |
| R61 | PD14CY2B272J | Carbon | 2.7kΩ | ±5% | 1/8W | |
| R62 | PD14CY2B101J | Carbon | 100Ω | ±5% | 1/8W | |
| R63 | PD14CY2B682J | Carbon | 6.8Ω | ±5% | 1/8W | |
| R64 | PD14CY2B332J | Carbon | 3.3kΩ | ±5% | 1/8W | |
| R65 | PD14CY2B101J | Carbon | 100Ω | ±5% | 1/8W | |
| R66 | PD14CY2B103J | Carbon | 10kΩ | ±5% | 1/8W | |
| R67 | PD14CY2B562J | Carbon | 5.6kΩ | ±5% | 1/8W | |
| R68 | PD14CY2B101J | Carbon | 100Ω | ±5% | 1/8W | |
| R69 | PD14CY2B103J | Carbon | 10kΩ | ±5% | 1/8W | |
| R70 | PD14CY2B562J | Carbon | 5.6kΩ | ±5% | 1/8W | |
| R71 | PD14CY2B101J | Carbon | 100Ω | ±5% | 1/8W | |
| R72 | PD14CY2B103J | Carbon | 10kΩ | ±5% | 1/8W | |
| R73 | PD14CY2B562J | Carbon | 5.6kΩ | ±5% | 1/8W | |
| R74 | PD14CY2B101J | Carbon | 100Ω | ±5% | 1/8W | |
| R75 | PD14CY2B103J | Carbon | 10kΩ | ±5% | 1/8W | |
| R76 | PD14CY2B562J | Carbon | 5.6kΩ | ±5% | 1/8W | |
| R77,78 | PD14CY2B101J | Carbon | 100Ω | ±5% | 1/8W | |
| R79 | PD14CY2B471J | Carbon | 470Ω | ±5% | 1/8W | |
| R80 | PD14CY2B683J | Carbon | 68kΩ | ±5% | 1/8W | |
| R81 | PD14CY2B330J | Carbon | 33Ω | ±5% | 1/8W | |
| R82 | PD14CY2B101J | Carbon | 100Ω | ±5% | 1/8W | |
| R83 | PD14CY2B471J | Carbon | 470Ω | ±5% | 1/8W | |
| R84 | PD14CY2B151J | Carbon | 150Ω | ±5% | 1/8W | |
| R85 | PD14CY2B821J | Carbon | 820Ω | ±5% | 1/8W | |
| R86,87 | PD14CY2B103J | Carbon | 10kΩ | ±5% | 1/8W | |
| **SEMICONDUCTOR** | | | | | | |
| Q1～12 | V03-0079-05 | Transistor | 2SC460(B) | | | |
| Q13 | V09-0012-05 | FET | 2SK19(GR) | | | |
| Q14 | V01-0037-05 | Transistor | 2SA495(Y) | | | |
| Q15 | V09-0012-05 | FET | 2SK19(GR) | | | |
| Q16 | V01-0037-05 | Transistor | 2SA495(Y) | | | |
| Q17 | V03-0079-05 | Transistor | 2SC460(B) | | | |
| Q18 | V30-0132-05 | IC | TD3400AP | | | |
| Q19 | V30-0173-05 | IC | MC4044P | | | |
| Q20 | V03-0271-05 | Transistor | 2SC1345(E) | | | |
| Q21,22 | V30-0174-05 | IC | MC1496G | | | |

# PARTS LIST

| Ref. No. | Parts No. | Description | Re-marks |
|---|---|---|---|
| D1～24 | V11-0076-05 | Diode 1S1555 | |
| | | **POTENTIOMETER** | |
| VR1 | R12-4021-05 | Semi-fixed resistor 5kΩ(B) | |
| | | **COIL** | |
| L1,2 | L40-1511-03 | Ferri-inductor 150μH | |
| L3 | L40-2201-03 | Ferri-inductor 22μH | |
| L4 | L40-1021-03 | Ferri-inductor 1mH | |
| L5～12 | L40-1511-03 | Ferri-inductor 150μH | |
| T1 | L34-0518-05 | BPF coil | |
| T2 | L34-0519-05 | BPF coil | |
| T3 | L34-0518-05 | BPF coil | |
| T4 | L34-0520-05 | LPF coil | |
| T5 | L34-0521-05 | LPF coil | |
| T6 | L34-0520-05 | LPF coil | |
| | | **CRYSTAL QUARTZ** | |
| X1 | L77-0497-05 | 20.5MHz (3rd over tone) | |
| X2 | L77-0488-05 | 7.3MHz (Original) | |
| X3 | L77-0489-05 | 9.0MHz (Original) | |
| X4 | L77-0490-05 | 12.5MHz (Original) | |
| X5 | L77-0491-05 | 19.5MHz (3rd over tone) | |
| X6 | L77-0492-05 | 26.5MHz (3rd over tone) | |
| X7 | L77-0493-05 | 33.5MHz (3rd over tone) | |
| X8 | L77-0494-05 | 34MHz (3rd over tone) | |
| X9 | L77-0495-05 | 34.5MHz (3rd over tone) | |
| X10 | L77-0496-05 | 35.0MHz (3rd over tone) | |
| J1～4 | R92-0150-05 | Short jamper | |
| — | E23-0046-04 | Terminal (square) × 9 | |
| — | E40-0607-05 | Connector × 2 6p | |
| — | E40-0626-05 | Type U pin wafer × 4 6p | |
| — | E40-0807-05 | Connector 8p | |
| — | E40-0826-05 | Type U pin wafer 8p | |
| — | F10-0401-04 | Shield plate | |
| — | F10-0404-04 | Shield plate | |
| — | F11-0238-04 | Shield plate | |

# DISASSEMBLY

**1. How to remove panel**

1) Remove all the knobs from the front panel.
2) Remove the dial escutcheon and front glass according to **Fig. 14**.
3) Remove the screws from both sides of the panel according to **Fig. 13**.

**2. How to remove VFO**

1) Remove upper and lower cases.
2) Disconnect the VFO output cable and 2P plug behind the VFO case.
3) Remove the four mounting screws from the VFO unit and subchassis of the body front according to **Fig. 14**.
4) Lift the VFO unit and extract it from the body, while taking care not to damage the subdial plate.

**3. Mono-scale dial adjustment**

1) Remove the knob and dial escation as shown in **Fig. 14**.
2) Turn the dial to the "0" of VFO dial scale.
3) Install the inside of the mono-scale so that the number "5" comes upside. (Only one number "5" exists.)
4) Fit the outside of the mono-scale with the inside so that the section of 12 division (12 kHz) right side from "0" comes up-center.
5) Install the inside and outside of the mono-scale to the shaft so that the number "5" can be seen through the small square hole (□ 90).

**NOTE:**

1) When installing the both sides of the mono-scale, provide a clearance of 1 ~ 1.5 mm between them.
2) Use care not to turn imprudently the mono-scale to avoid damaging it.

6) Install the dial escation and knob as shown in **Fig. 14**.

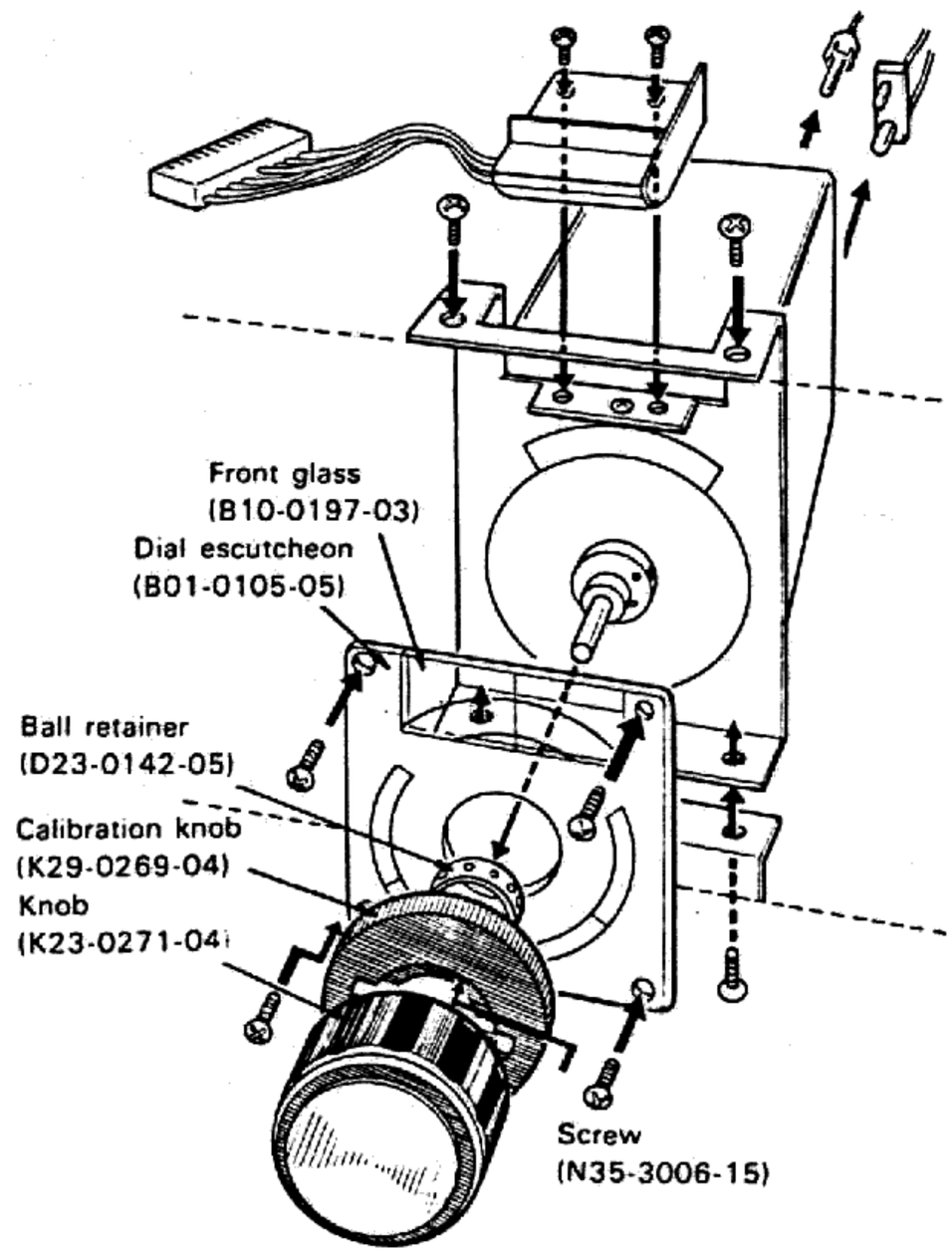


**Fig. 14 Removing VFO**

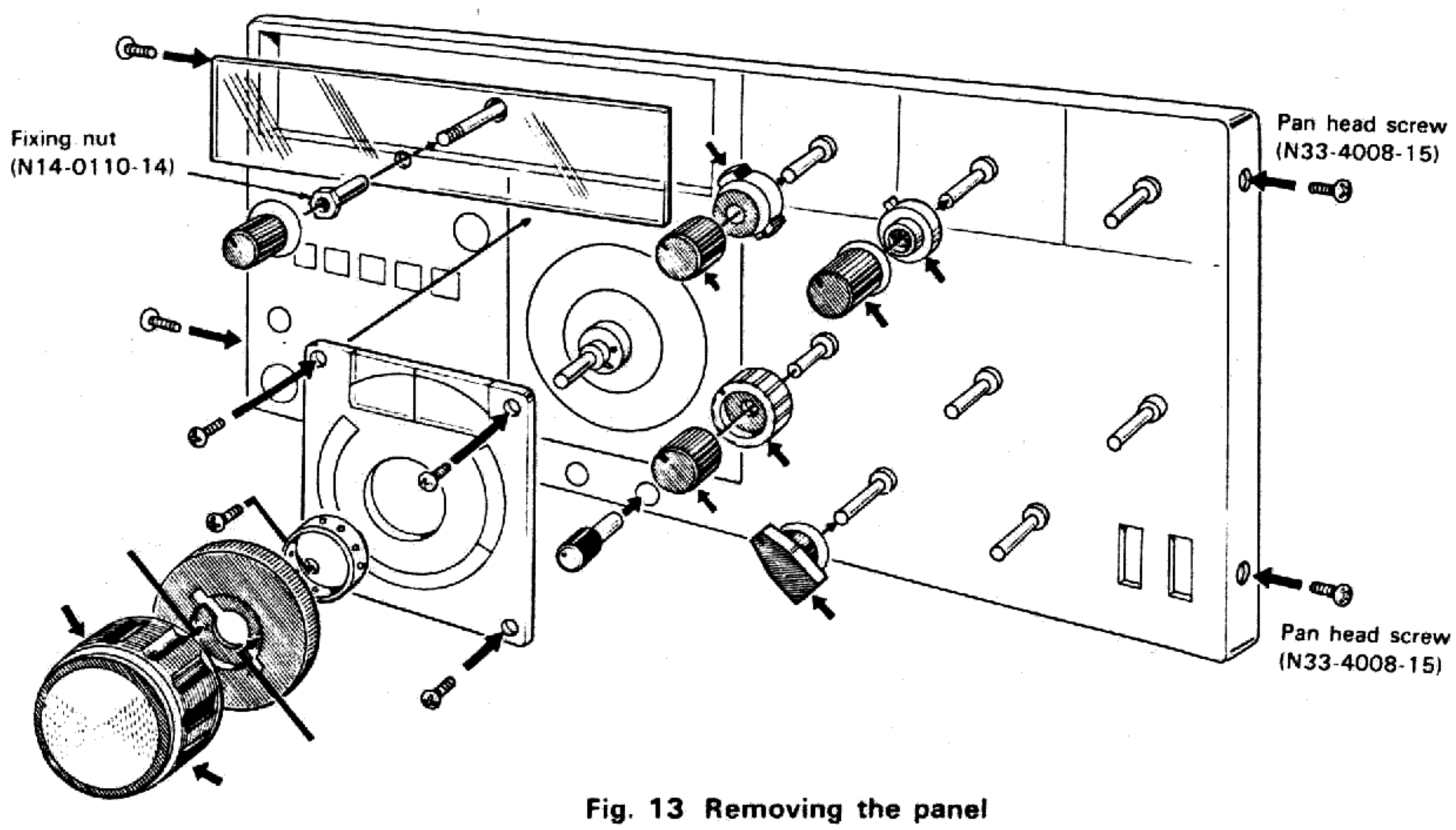


**Fig. 13 Removing the panel**

# DISASSEMBLY

**3. How to check counter assembly (DG-1: Option)**

1) For the mounting procedure of the counter assembly, refer to **Fig. 15** "Modification first option mounting procedure".

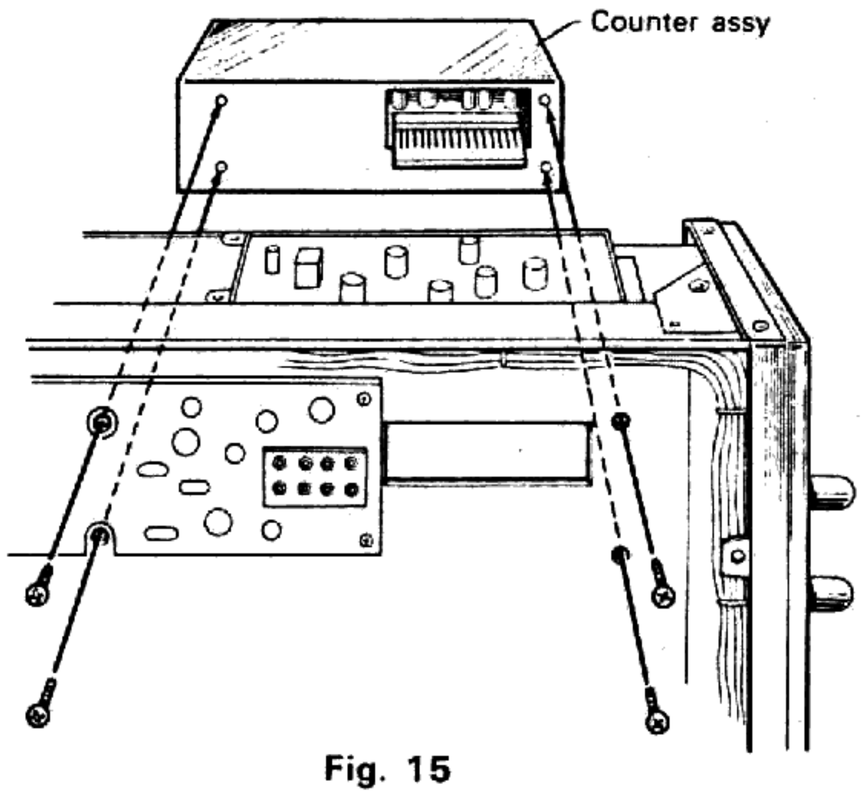


**Fig. 15**

2) When checking each voltage, attach the printed circuit boards, as shown in **Fig. 16**.

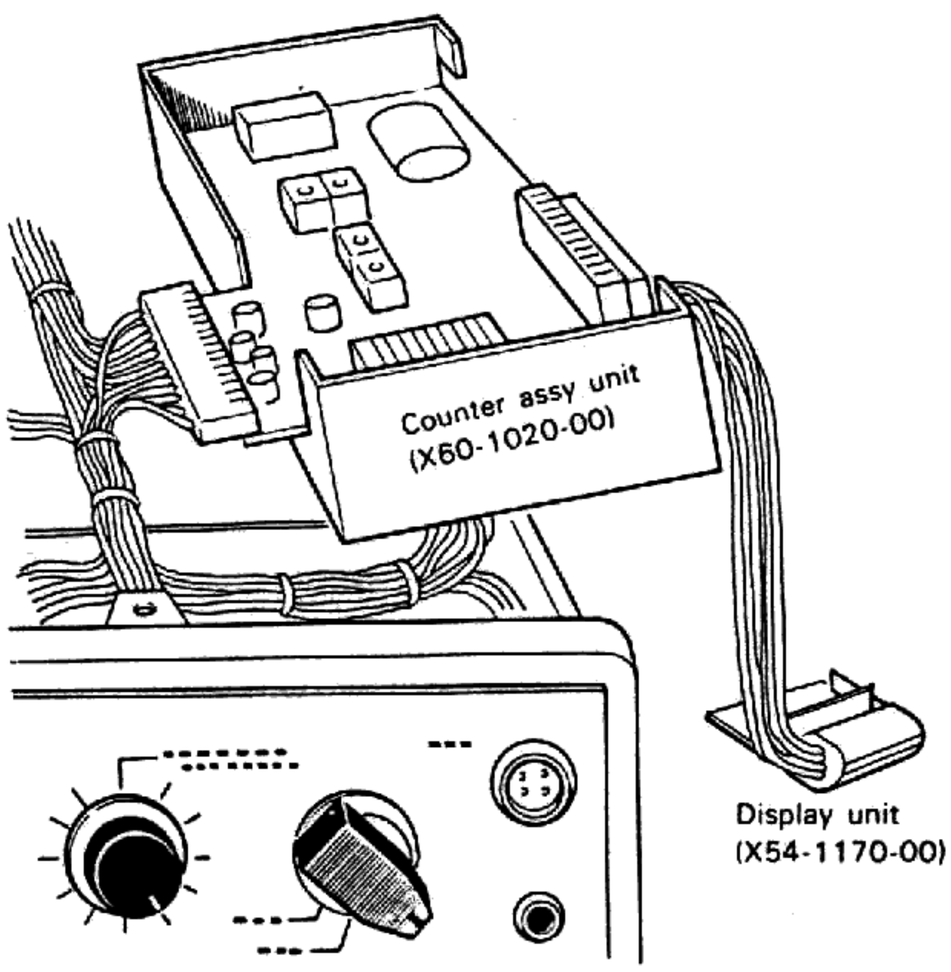


**Fig. 16**

3) Since the patterns in the counter assembly unit are thin and subject to heat, use a soldering iron with a small capacity of approx. 20W and carry out unsoldering quickly.

**4. How to remove VOX/VR unit**

1) Remove the panel according to the instruction mentioned in Item 1 above.
2) Remove the upper and lower cases.
3) Remove the two each screws, by which the individual switches are attached to the subpanel.

**5. How to remove RIT and RF ATT switches**

1) Remove the panel according to the instruction shown in Item 1 above.
2) Remove the upper and lower cases.
3) Remove from the subpanel the chassis, on which the VOX/VR unit is mounted, according to **Fig. 17** and detach the unit.

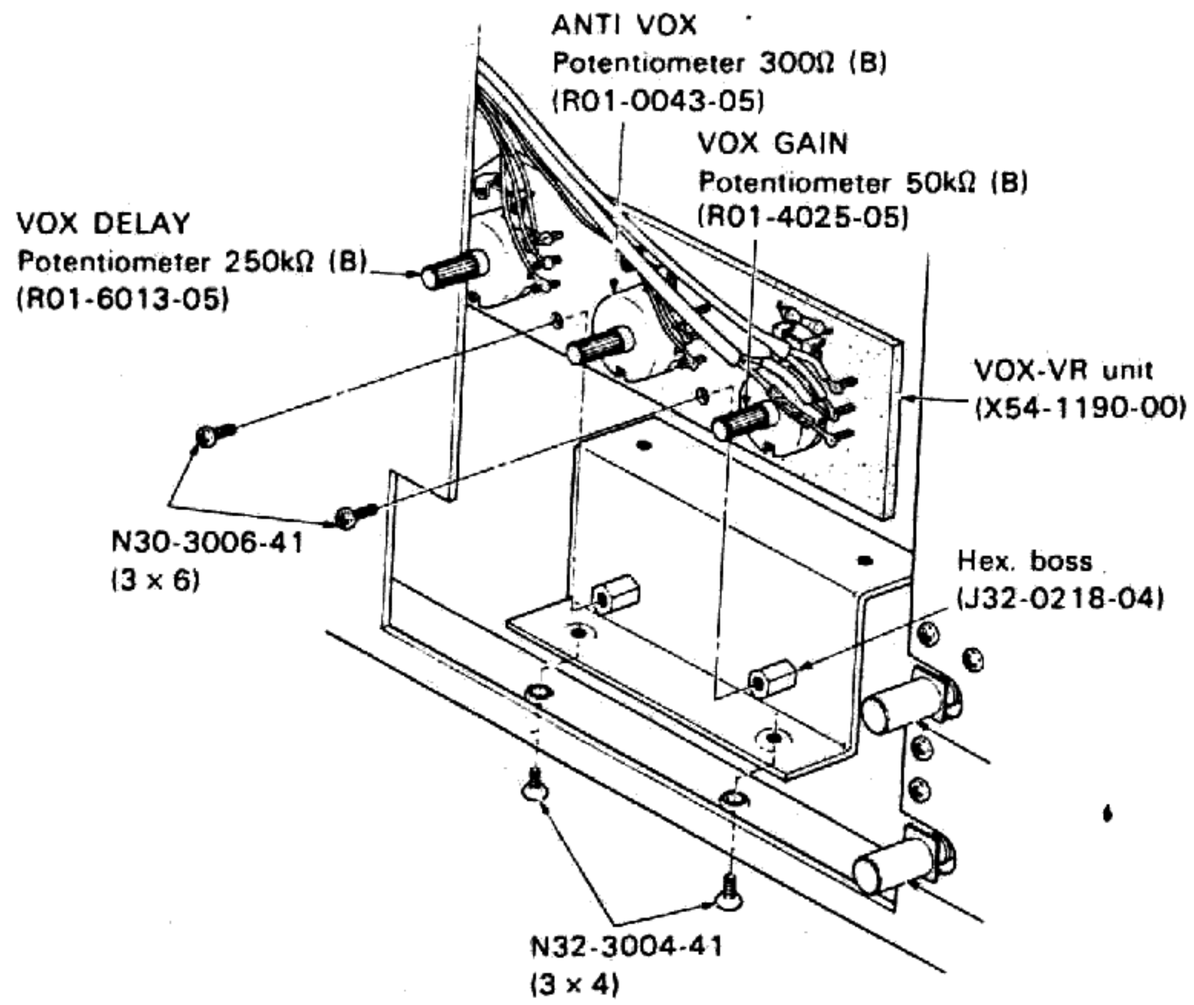


**Fig. 17(a) Removing the VOX • VR unit**

**6. How to remove meter**

1) Remove the upper and lower cases.
2) Remove the two screws, by which the meter is attached to the subpanel.

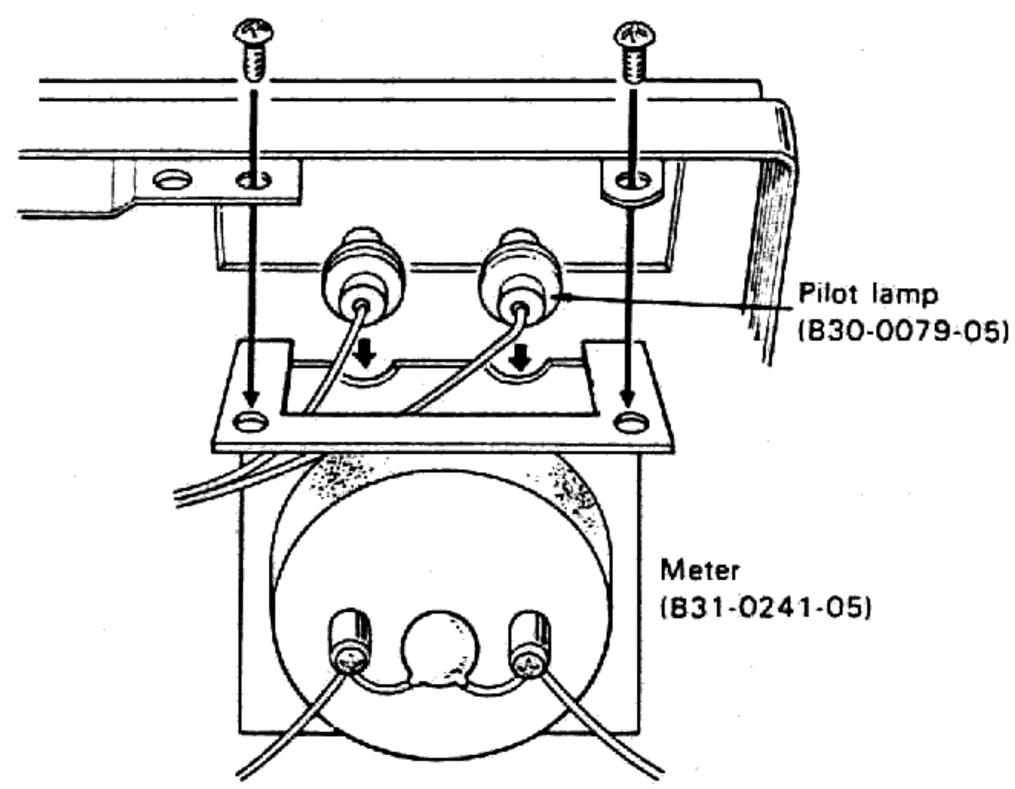


**Fig. 17(b) Removing the meter**

# DISASSEMBLY

**7. How to remove paddel switch**

1) Remove all the knobs and dial plates from the front panel according to Item 1.
2) Remove the meter according to Item 6.
3) Extract the spring plate of the paddel switch up to the subpanel front, while pushing its tip with a screwdriver (refer to **Fig. 18**).
4) When the normal paddel switch is inserted into the subpanel from the front, it is fixed to the subpanel by means of the spring plate. To replace the knob of the paddel switch, insert the tip of a thin driver into a gap of the switch and detach the knob by utilizing the principle of the lever and then insert a normal knob (refer to **Fig. 18**).

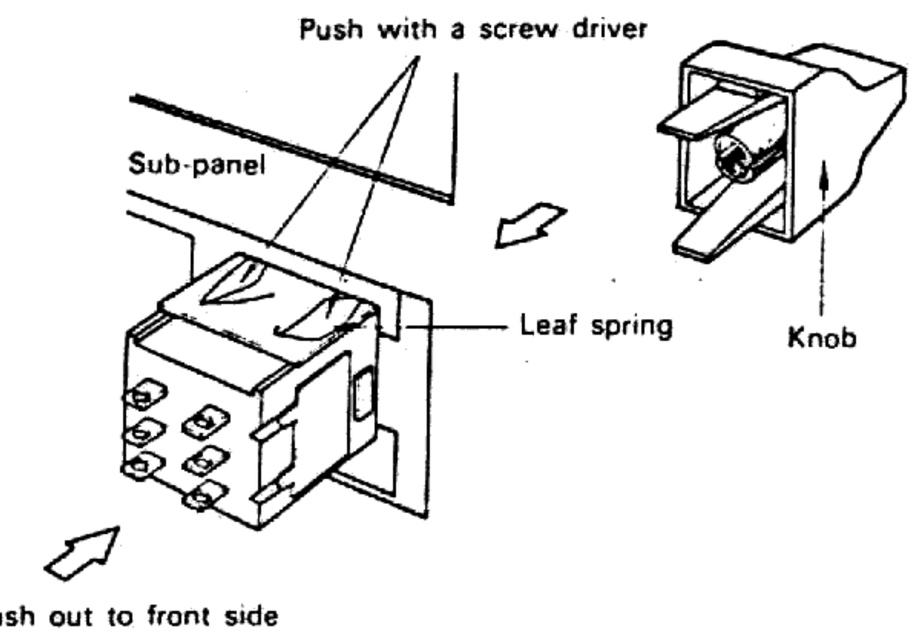


**Fig. 18**

**8. How to disconnect lead from miniplug**

According to the figure shown below, hold the pin with a thin screwdriver through the miniplug hole and pull the lead. The lead will be able to be disconnected from the miniplug.

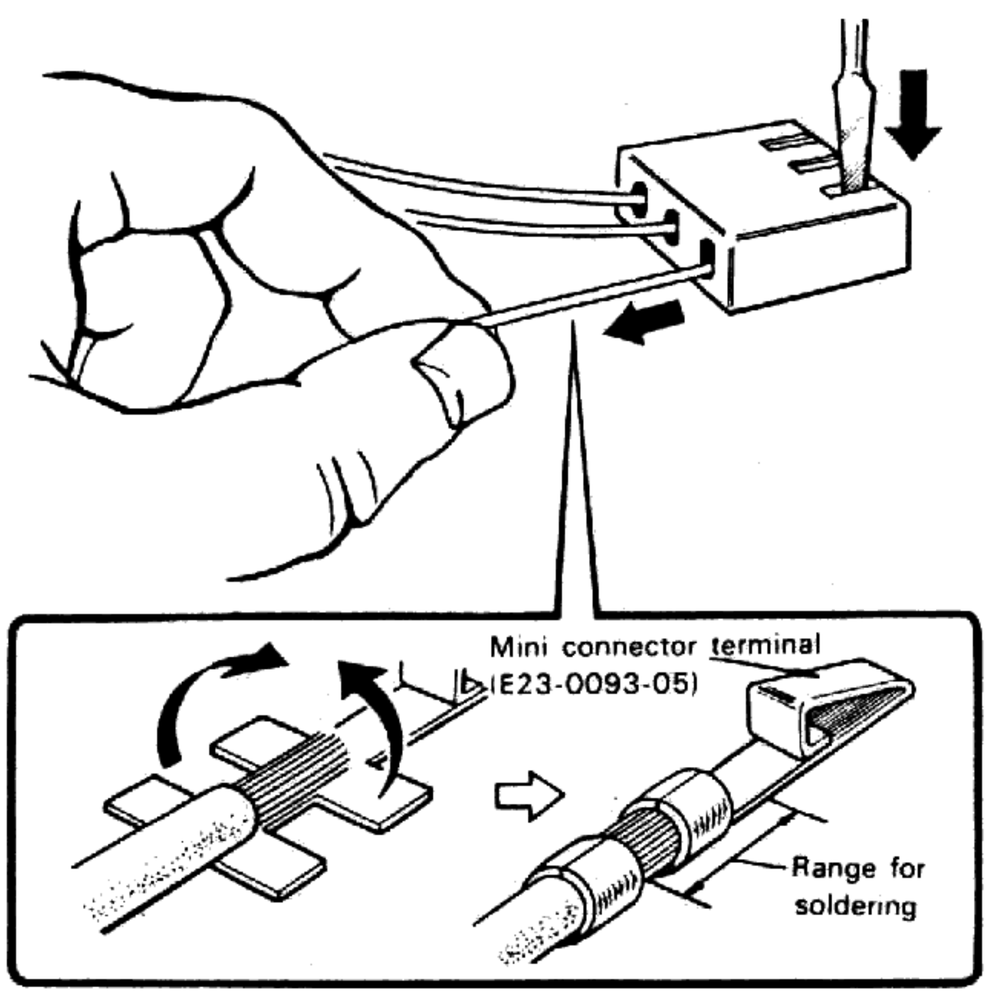


**Fig. 19**

**9. Sectional view of VFO shaft**

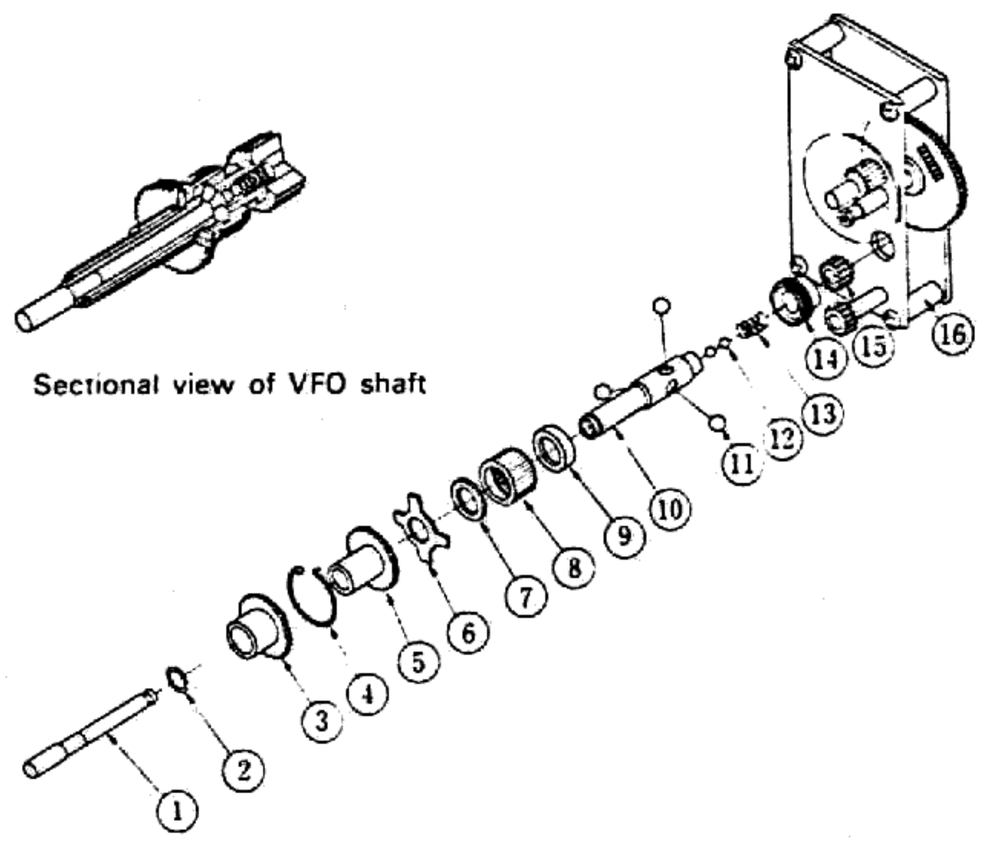


1. Knob axle
2. Coil washer
3. Differential gear B
4. Coil spring
5. Differential gear A
6. Plate spring
7. Washer A
8. Cap ring
9. Taper collar
10. Reduction axle
11. Steel ball A
12. Steel ball
13. Spring C
14. Bearing
15. First gear
16. Gear assembly

meter = HV
mode = USB
Band = 21
Plate = 3.5

# TROUBLESHOOTING

## RECEIVER SECTION

| Symptom | Condition | Service Point | Cause | Remedy |
|---|---|---|---|---|
| 1. No power from power supply | | 1) Fuse<br>2) Power switch<br>3) AC cord | • Blown fuse<br>• Defective switch<br>• Broken wire around plug | • Refer to the next item.<br>• Continuity check<br>• Continuity check |
| 2. Blown fuse | | 1) Low frequency unit (X49-1080-00)<br>2) B circuit | • Q7 2SA496, Q3 TA72dP defective<br>• In contact with chassis. | • Disconnect B terminal lead and check<br>• Check and repair |
| 3. Non-receiving | • Noise can not be heard. | 1) Speaker<br>2) AF-AVR unit<br>3) Phone jack | • Speaker defective<br>• Q3 TA7201P defective<br>• Poor contact | • Replace<br>• Disconnect B terminal lead and check.<br>• Continuity check |
| | • Noise can be heard. | 1) AF GAIN variable resistor<br>2) Each transistor<br>3) VCO<br>4) IF circuit (X48-1150-00) | • AF GAIN variable resistor VR4-1 10kΩ defective<br>• Defective transistor<br>• Regulated voltage power supply defective.<br>• Deteriorated Q1, Q2, Q3<br>• IFT, T1, T2, T3, T4, T6, T7 mistuned or broken wire.<br>• BPF mistuned or broken wire.<br>• Bias circuit defective<br>• Defective diode switch circuit for crystal filter. | • Continuity check<br>• Voltage check, replace<br>• Refer to PLL trouble-shooting.<br>• Voltage check and operation check according to level diagram.<br>• Readjust and continuity check.<br>• Check X'TAL X1, X2<br>• Check voltage in 14V line and AGC line.<br>• Voltage check or operation check according to level diagram. |
| | | 5) RF, ANT circuit | • ANT and RF coil mistuned.<br>• Poor contact of rotary switch<br>• Broken wire of coaxial cable or RF ATT in ANT circuit<br>• Poor contact of XVTR switch S19<br>• Short circuit of tuning variable capacitor<br>• Deteriorated Q2, Q3, Q6, Q7 | • Adjustment<br>• Continuity check<br>Continuity check<br>• Continuity check<br>• Disconnect lead from MD terminal in drive unit coil pack and check continuity of variable capacitor.<br>• Bias check<br>• Operation check according to level diagram |
| | | 6) Detector circuit (X48-1150-00) | • Unbalanced received carrier | • Adjust |
| 4. S meter | • Pointer won't deflect | 1) IF unit (X48-1150-00) | • Misadjusted semi-fixed variable resistor VR1 (10kΩ) for zero setting<br>• Misadjusted semi-fixed variable resistor VR2 (500kΩ) for sensitivity setting<br>• Malfunction of Q15 and Q16 (2SC733) in AGC circuit<br>• Broken wire of RFC L10 and L11 (150μH) | • Adjust<br>• Adjustment<br>• Voltage check and replace<br>• Continuity check |
| | | 2) Relay unit (X43-1190-00) | • Defective relay RL | • Continuity check |
| | • Pointer is kept deflected | 1) AF.AVR unit (X49-1080-00)<br>2) IF unit (X48-1150-00) | • Reduced RF1 reference bias voltage<br>• Deviated carrier balance VR3, TC3 | • Readjust RF1 to 3.3V<br>• Adjustment |

# TROUBLESHOOTING

| Symptom | Condition | Service Point | Cause | Remedy |
|---|---|---|---|---|
| 5. Marker is inoperative | | 1) Marker unit (X52-0005-01) | • Poor contact in FUNCTION switch S5-4<br>• Broken wire of coaxial cable connected to MO terminal<br>• Broken wire of RFC, L1 (12mH)<br>• Defective crystal oscillator element X1 (100kHz) | • Continuity check and voltage check at terminal 9<br>• Continuity check<br>• Continuity check and voltage check of Q1, 2SC373<br>• Replace |

## TRANSMITTER SECTION

| Symptom | Condition | Service Point | Cause | Remedy |
|---|---|---|---|---|
| 1. No output is obtained | | 1) Final stage | • Deterioration of or malfunction of S2001<br>• Poor contact of relay RL1<br>• Poor contact of rotary switch S4<br>• Short circuit in loading variable capacitor VC2 | • Voltage check or replacement check<br>• Continuity check<br>• Continuity check<br>• Continuity check |
| | | 2) Oscillation stop in each oscillator | • Defective carrier VFO, heterodyne or crystal, etc. | • Refer to item of symptom of receiver section. |
| | | 3) RF unit | • Deteriorated drive tube V1 (12BY7A) or broken heater filament | • Voltage check |
| | | 4) IF unit (X48-1150-00) | • Broken wire of CAR-2 coaxial cable<br>• Defective FET Q13SK35 (GR)<br>• Poor contact or broken lead of MIC GAIN VR (10kΩ) | • Continuity check<br>• Voltage check<br>• Continuity check |
| 2. No output is obtained | | 1) Final stage | • Deterioration or malfunction of S2001 | • Voltage check or replacement check |
| | | 2) RF unit (X44-1150-00) | • Deteriorated vacuum tube | • Voltage check of replacement check |
| | | 3) IF unit and RF unit (X48-1150-00) | • Mistuned IFT coil pack | • Refer to the receiver section troubleshooting and the level diagram of transmitter section. |
| 3. No Ip meter reading | | 1) Final stage | • Malfunction of S2001<br>• Poor contact in SG switch<br>• Defective meter circuit | • Voltage check<br>• Voltage check<br>• Continuity check |
| 4. No ALC meter reading | | 1) RF unit (X44-1150-00)<br>2) ALC circuit | • Defective Q5 2SC1515 (ALC AMP)<br>• Low drive voltage<br>• Short circuit in ALC circuit<br>• Poor contact in relay of relay unit | • Voltage check<br>• Refer to Symptoms 1 and 2.<br>• Continuity check<br>• Continuity check |
| 5. No HV meter reading | | 1) Power supply section<br>2) Meter circuit | • Defective power supply<br>• Broken lead or voltage dividing resistors | • Check power voltages<br>• Continuity check |
| 6. Standby switch is inoperative | (Including PTT) | 1) FIX-VOX unit (X50-1350-00) | • Broken lead connected to VS or SS terminal<br>• Defective Q9, 2SA562 or short circuit in D17, IN60 | • Continuity check and voltage check<br>• Voltage check |
| | | 2) Standby switch | • Poor contact in switch | • Continuity check and voltage check |

# TROUBLESHOOTING

## COUNTER (DG-1: Option)

| Symptom | Condition | Service Point | Cause | Remedy |
|---|---|---|---|---|
| 1. Counter malfunctions (main body operation also abnormal) | • No lighting | 1) COF terminal | • DC 1.2V appears due to defect in PLL circuit | • Voltage check |
| | | | • Disconnect COF lead from terminal. If lights up, the counter is normal. | • Check |
| | | 2) VCO signal terminal | • No signal comes in | • Defective VCO oscillator circuit |
| | • Display becomes 9.000.0/ 19.000.0/ 29.000.0 | | • No carrier signal comes in | • Check signal system |
| | • Display won't be stabilized | | • Level down of carrier or VCO signal | • Level check |
| | | | • Unlocking of PLL circuit | • Readjust PLL coil |
| 2. Counter malfunctions (main body normally operated) | • No lighting | | • Interrupted 5V power source | • Check |
| | | | • Defective 5V supply line | • Check |
| | | | • Defective DC-DC converter | • Check |
| | | | • Poor contact with display unit | • Check |
| | | | • Defective decoder unit IC6, Q12-20 in counter mixer unit | • Check |
| | • Display becomes 9.000.0/ 19.000.0/ 29.000.0 | 1) No input is applied to counter circuit | • Defect around 7.83MHz mixer circuit | • Check |
| | | | • Defect around SN76514N mixer circuit | • Check |
| | | | • Defective parts in LPF circuit | • Check |
| | | | • Defective wide-band amplifier (Q5～Q8) | • Check |
| | • Display won't be stabilized | 1) Insufficient input to counter circuit (X54-1160-00) | • Defect around 7.83MHz mixer circuit | • Check circuit |
| | | 2) Defective gate and reset latch pulse generator circuit | • Defective IC3～IC5 in counter circuit (X54-1160-00) | • Check circuit |
| | • Only one digit lights up | 1) Oscillation stop of reference oscillator | • Defect around IC2 in X54-1150-00 | • Operation check |
| | | 2) Stop of time base frequency divider | • Defect around IC3～IC5 in X54-1150-00 | • Operation check |
| | | 3) Stop of scanning control circuit in multiplexer | • Defect around IC24～IC26 in X54-1160-00 | • Operation check |
| | | 4) Stop of multiplexer circuit in multiplexer | • Defect around IC17～IC23 in X54-1160-00 | • Operation check |

# TROUBLESHOOTING

## PLL

| Symptom | Condition | Service Point | Cause | Remedy |
|---|---|---|---|---|
| 1. None of receiving input and transmitting output are obtained regardless of turning of VFO | • Frequency is unchanged and no VCO output is obtained regardless of turning of VFO<br>In S type, counter display goes out | 1) Each unit of PLL, CAR, and VFO | • VOF (abbreviation for VCO-OFF) circuit is energized since no signal pulse is applied to phase detector in PD unit. | • Check pulse waveform and level at pin (1) and (3) of Q19MC 4044<br>• With pin (1), defective VCO and CAR systems, mixers and crystal oscillators in PD unit |
| | | 2) Lead of connector | • Oscillation stop of VCO | • With pin (3), defective VFO system |
| | | 3) VOF terminal voltage in PLL unit (0.1V or less normal) | • Oscillation stop of VFO or no input to PD unit<br>• Oscillation stop of VFO or no input to PD unit<br>• Oscillation stop of CAR or no input to PD unit | • Check lead for continuity<br>• Check lead for continuity<br>• Check lead for continuity |
| 2. Unlocking in S type, the counter is operative | • Frequency is unchanged regardless of turning of VFO<br>VCO output is obtained | 1) Each unit and varicap voltages in PPL unit | • Low level in each oscillator<br>• Defective IC Q18, Q19 and Q20 in PD unit<br>• Defective variable capacitance diodes in VCO unit<br>• Defective 5V power supply | • Check each oscillator for proper level and waveform<br>• Replace diode<br>• Check 5V power supply (zener) in PL unit<br>• Voltage check |
| 3. Unlocking near the band edges | • Frequency is unchanged near the upper and lower band edges regardless of turning of VFO | 1) Each unit and varicap voltages in PLL unit | • Core deviation in VCO coil | • Adjust VCO coil<br>• Adjust BPF<br>Refer to their adjusting procedure. |
| 4. VOF circuit is inoperative regardless of stopping of VFO oscillation oscillation (for example, remote VFO is removed) | • The same condition as in unlocking | 1) Waveforem measurement of Q15, pin 6 in PD unit<br>2) Operation check of Q15 in VCO unit | • Defective IC Q19 in PD unit<br>• Defective D12, D13 and Q17<br>• Defective Q15 in VCO unit | • Replace IC, transistor and diode |

## TRANSMITTER SECTION

MOD: CW
SG: OFF
Adjust CAR LEVEL for maximum indication of the ALC meter and measure signal level at each point.

**NOTE:**
When SG = ON, the level preceding the driver stage increases because of RF NFB.

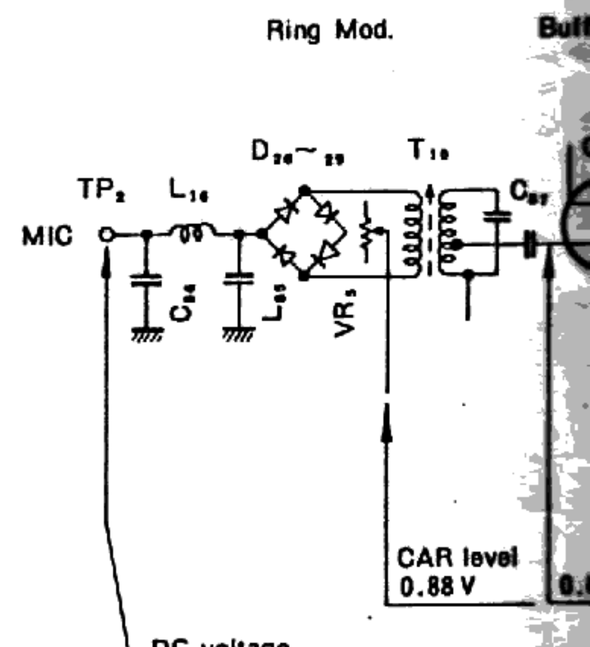


| | DC voltage at reception |
|---|---|
| 1.90 | 0.27V |
| 3.75 | 0.24 |
| 7.15 | 0.27 |
| 14.175MHz | 0.25 |
| 21.225 | 0.27 |
| 29.9 | 0.40 |

These levels are meas

## RECEIVER SECTION

MODE: CW
AGC: OFF
RF Gain: MAX

1. Apply the SSG signal (0 dBμ at 14.175 MHz) to ANT terminal. Adjust AF GAIN for 0.63V/8Ω AF output and keep it's position.
2. Connect SSG to each point and adjust SSG output for 0.63V/8Ω AF output. Next read out SSG output in dBμ. (50Ω SSG load open circuit voltage.)
3. In other band, measure the level in the same way.

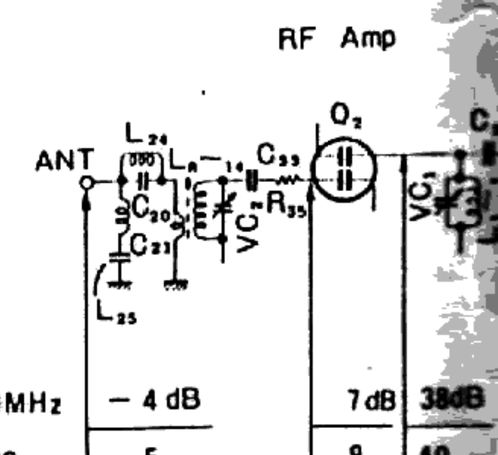


| | | | |
|---|---|---|---|
| 15.0MHz | − 4 dB | 7dB | 38dB |
| 1.90 | − 5 | 9 | 40 |
| 3.75 | − 3 | 11 | 38 |
| 7.15 | − 7 | 10 | 37 |
| 14.175 | − 0 | 10 | 40 |
| 21.225 | − 4 | 9 | 37 |
| 29.0 | 8 | 5 | 32 |

# LEVEL DIAGRAM

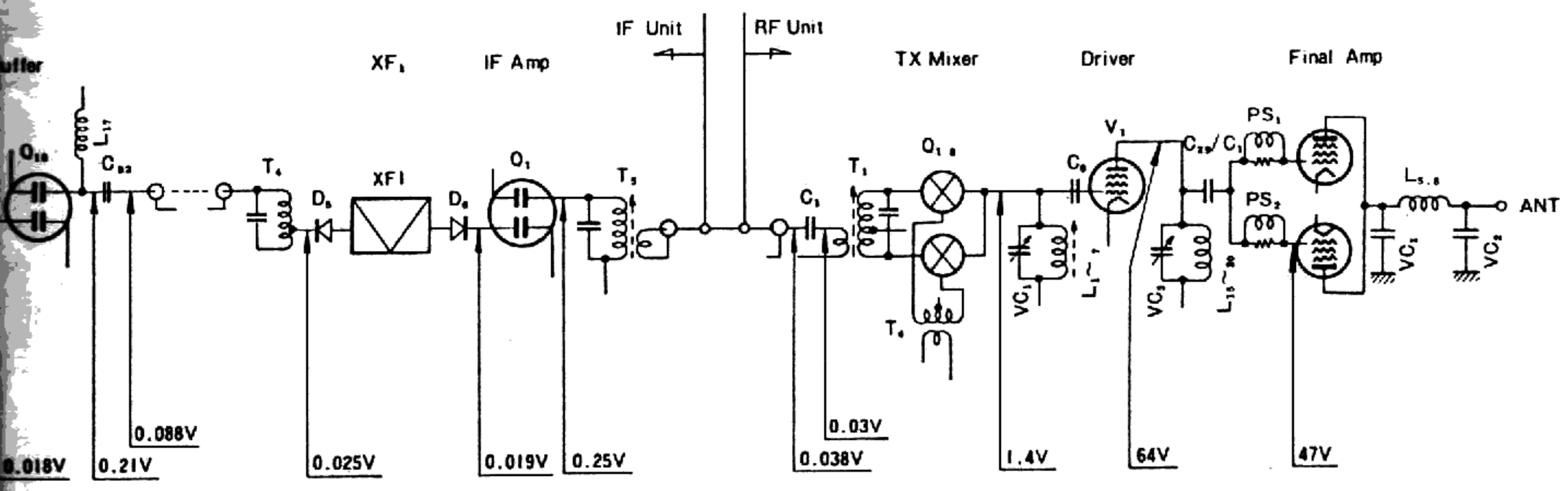


sured at 14.175 MHz

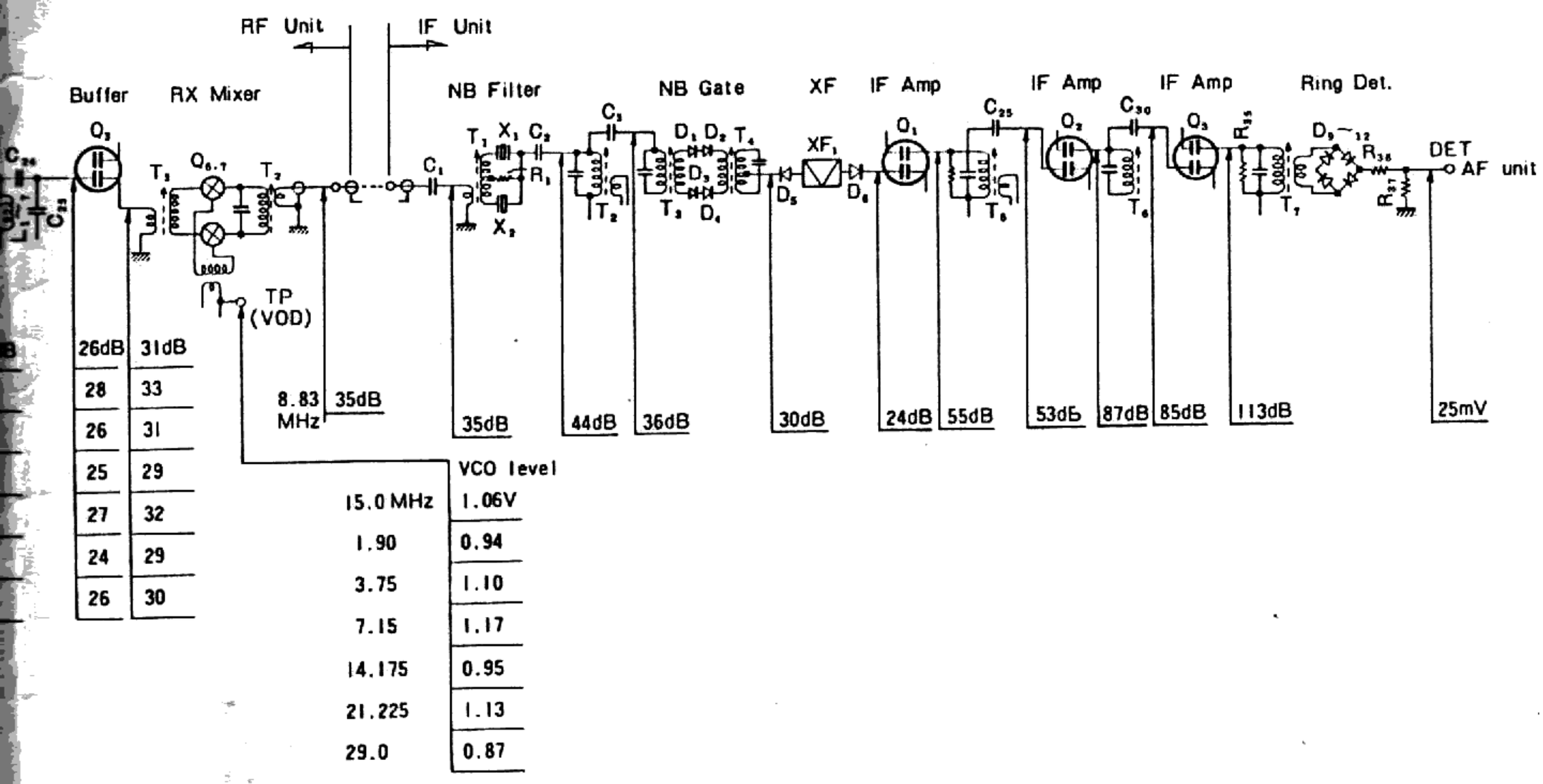

# ADJUSTMENTS

## GENERAL

The contents of the adjustment procedures of this transceiver are classified into formal adjustment at service benches and simplified adjustment using a voltmeter, AF and RF vacuum-tube voltmeters AG, and dummy load (AF and RF). The following adjustments require high precision measuring instruments such as a frequency counter, SSG, and sweep generator and so on. Thus, if such measuring instruments are unavailable, it is necessary to bring the transceiver to a place where such instruments are available and make adjustment while taking care not to touch the parts to be adjusted.

1. 2-1 carrier frequency adjustment (adjustment inside the CAR unit).
2. 2-5 IF trap coil adjustment and 5-2-2 trap coil adjustment (L24 and L25 in coil pack unit and T12 in VCO unit).
3. 2-8 S meter sensitivity adjustment (VR2 in IF unit).
4. 3-1 Standard oscillator adjustment of counter (trimmer TC1 in counter unit).
5. 5-1-1 BPF adjustment of PLL (T1, T2 and T3 in PD unit).

## TEST EQUIPMENT REQUIRED

**1. Voltmeter**

1) Input resistance: More than 1MΩ
2) Voltage range: FS = AC/DC 1.5 to 1000V

**NOTE:**
High-precision circuit testers may be used. However, be careful since accurate reading is not obtained in high-impedance circuit measurement.

**2. RF vacuum-tube voltmeter (RF VTVM)**

1) Input impedance: More than 1MΩ and less than 20pF
2) Voltage range: FS = 10mV to 300V
3) Measurable frequency range: More than 50 MHz

**NOTE:**
When special accuracy is not required during adjustment (such as input level or ca-rier oscillation output in PLL circuit), a voltmeter or circuit tester may be substituted for RF VTVM by connecting it to the output of detector as mentioned later.

**3. AF voltmeter**

1) Measurable frequency: 50 Hz to 10 kHz
2) Input resistance: More than 1MΩ
3) Voltage range: FS = 10mV to 30V

**4. AF generator (AG)**

1) Frequency range: 200 Hz to 5 kHz
2) Output: Maximum 1V

**NOTE:**
The distortion factor of AF generator should be small.

**5. AF dummy load**

1) Impedance: 8Ω
2) Power: More than 3W

**6. RF dummy load**

1) Impedance: 50 to 75Ω
2) Power: Endurable against power of more than 100W
3) Applicable frequency: 1.8 to 30 MHz

The above-mentioned instruments may be used for simplified adjustment. For the precise adjustment, the following measuring instruments are additionally necessary.

**7. Oscilloscope**

Select equipment that has as high sensitivity as possible and permits external synchronization.

**8. Slow sweep generator**

1) Center frequency: 8.83 MHz
2) Frequency deviation: Maximum ±5 kHz
3) Output voltage: More than 0.1V
4) Sweep rate: At least 0.5 sec/cm

**9. SSG**

1) Oscillation frequency: 1.8 to 30 MHz
2) Output: 0 dB/μV ~ 120 dB/μV

**NOTE:**
Select an equipment that the oscillation frequency is stable in non-modulation and there are small level of frequency modulation components.

**10. Frequency counter**

1) Minimum input voltage: 50mV
2) Measurable frequency range: More than 40 MHz

**11. Noise generator**

Select an equipment that generates ignition-like noise containing high harmonics up to 30 MHz or more.

**12. Directional coupler**

# ADJUSTMENTS

## PREPARATORY WORK

1. Remove the upper and lower cases according to the figure below. When making adjustment with the side face of the set up, be sure to position the final stage at the upper side. Otherwise, the ventilation effect of the final stage, cooling effect, is deteriorated and the final tube may be deteriorated.

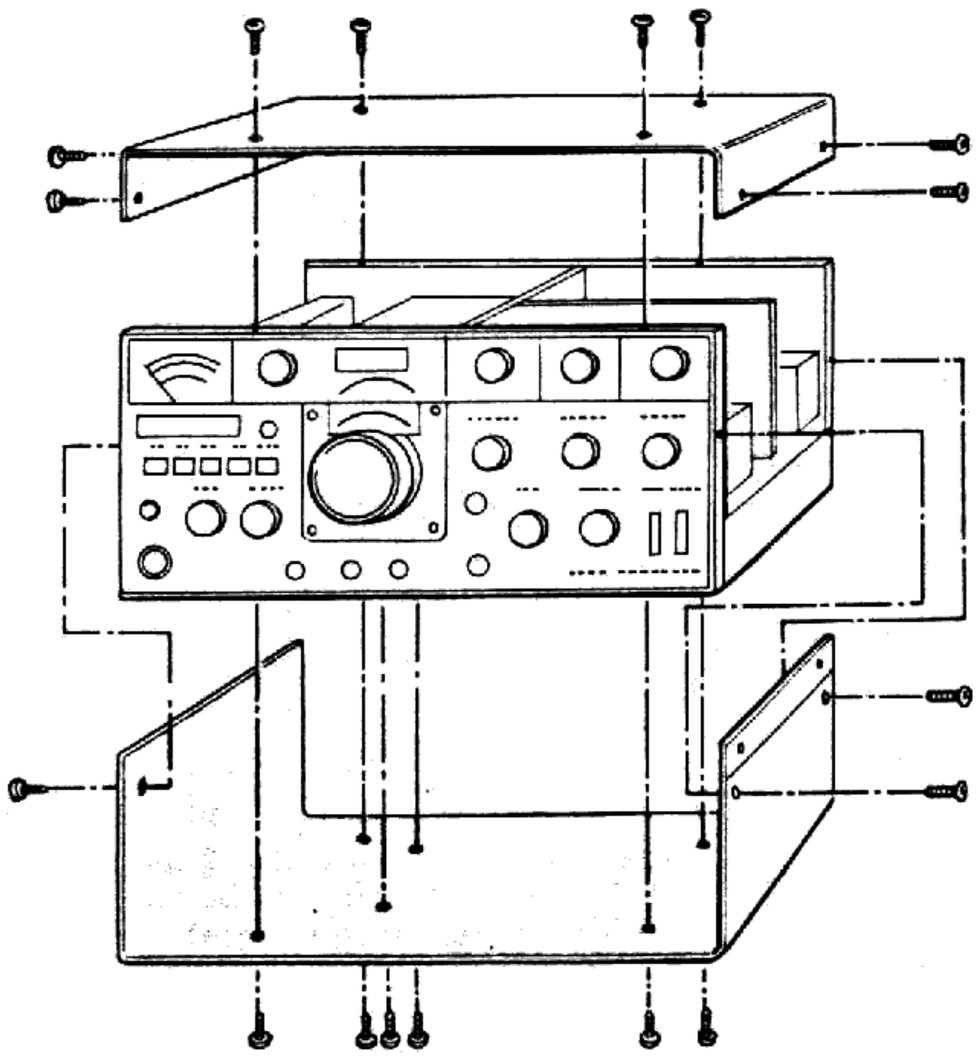

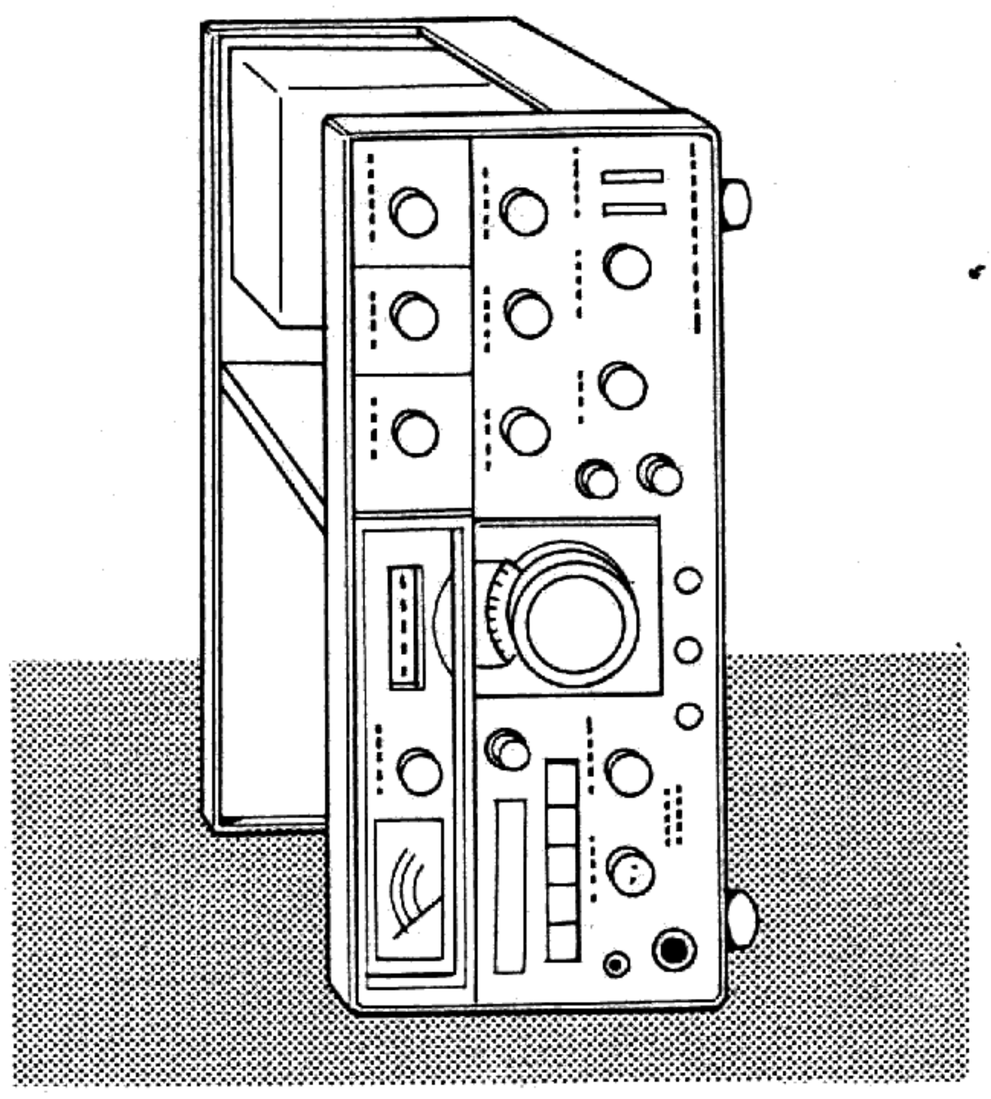

2. Unless otherwise specified, set the respective knobs to the following positions.
   1) Front panel

| | |
|---|---|
| MODE | USB |
| FUNCTION | VFO |
| RF GAIN | MAX |
| HEATER | OFF |
| VOX | MAN |
| NB | OFF |
| MONI | OFF |
| AGC | FAST |
| PROCESSOR | OFF |
| RF ATT | OFF |
| RIT | OFF |
| IF SHIFT | 0 (Center) |
| DH | OFF |
| STBY | REC |
| POWER | ON |

   2) Rear panel

| | |
|---|---|
| SG SW | OFF |
| X VERTER SW | OFF |

## 1. Adjustment of Power Supply

### 1-1. 9V adjustment

1. Measuring instrument used: Voltmeter
2. Adjusting procedure
   Connect the voltmeter between the 9V terminal and chassis on AF-AVR unit (X49-1080-00) and adjust VR4 on AF AVR unit until 9V is obtained (refer to **Fig. 20**).

**AF-AVR**

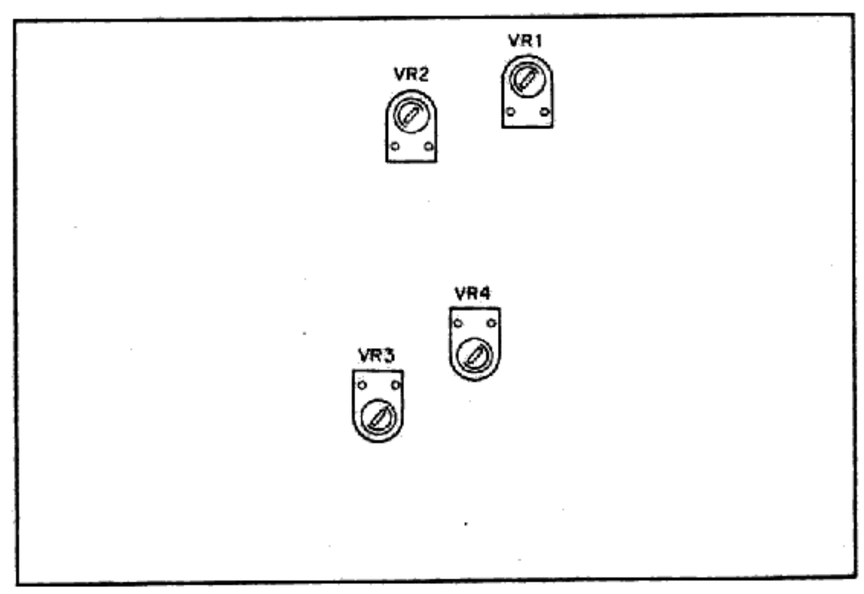


**Fig. 20 AF-AVR unit**

### 1-2. RF1 (3.3V) adjustment

1. Measuring instrument used: Voltmeter
2. Adjusting procedure
   Connect the voltmeter between RF1 terminal and chassis on AF-AVR unit (X49-1080-00) and adjust VR1 on AF-AVR unit until the meter reads 3.3V.

# ADJUSTMENTS

## 2. Adjustment of Receiver Section

### 2-1. Carrier unit adjustment

1. Measuring instruments used
   1) RF VTVM
   2) Frequency counter
2. Adjusting procedure
   DRIVE: Center (12 o'clock position)
   1) Connect RF VTVM to TP5 in IF unit (X48-1150-00) and adjust oscillation coil T1 in CAR-1 unit (X50-1310-00) until the meter reads 50mV (refer to **Fig. 21**). (refer to **Fig. 24** IF unit)

CAR-1

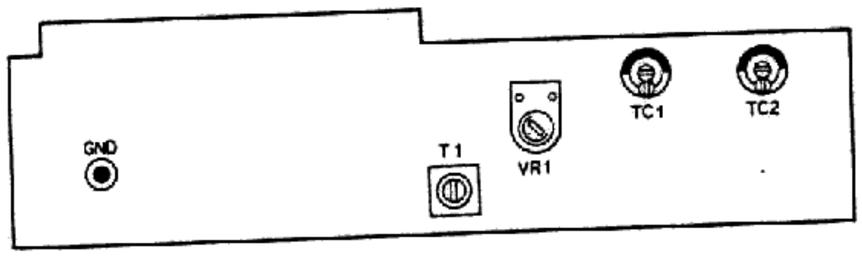


CAR-2

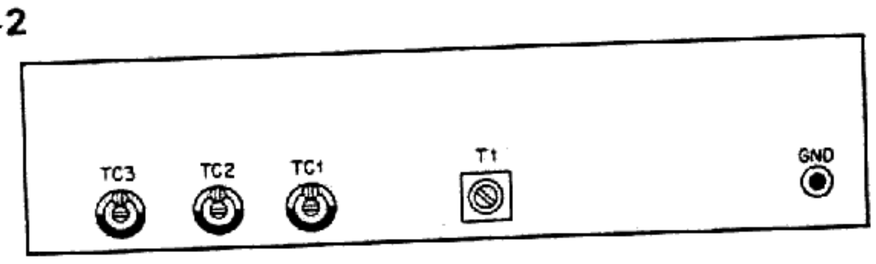


**Fig. 21 CAR unit**

   2) Set the MODE switch to CW and the STBY switch to SEND and adjust oscillation coil T1 in CAR 1 unit (X50-1320-00) similarly.
   3) Connect the frequency counter to TP5 in IF unit and make adjustment as shown below, while changing over the MODE and STBY switches.

| MODE SW | STBY SW | ADJ | ADJ FREQ |
|---|---|---|---|
| USB | REC | USB(TC2) | 8831.500KHz |
| LSB | REC | LSB(TC1) | 8828.500 〃 |
| FSK SPC | SEND | TC1 | 8830.700 〃 |
| FSK NARRW MRK | SEND | TC2 | 8830.530 〃 |
| FSK WIDE MRK | SEND | TC3 | 8829.850 〃 |

**NOTE:**
When changing over from FSK SPC to FSK MRK, or vice versa, open or short the RTTY key on the rear panel. For change-over from NARROW to WIDE, or vice versa, use the switching connector (E31-0037-05) in CAR ASSY unit (X60-1000-00) and after adjustment set it to NARROW (refer to **Fig. 11**).

### 2-2. Voltage adjustment of VCO

1. Measuring instrument used: Voltmeter
2. Adjusting procedure
   1) Connect the voltmeter to TP4 in VCO unit (X50-1330-00) of PLL unit (X60-1010-00) (refer to **Fig. 22**).
   2) Set VFO scale to 250 and check if the voltmeter reading is within 2.9 to 3.2V, while changing over bands.

**NOTE:**
For the detailed adjusting procedure, refer to the adjusting method of PLL ASSY unit described later.

VCO

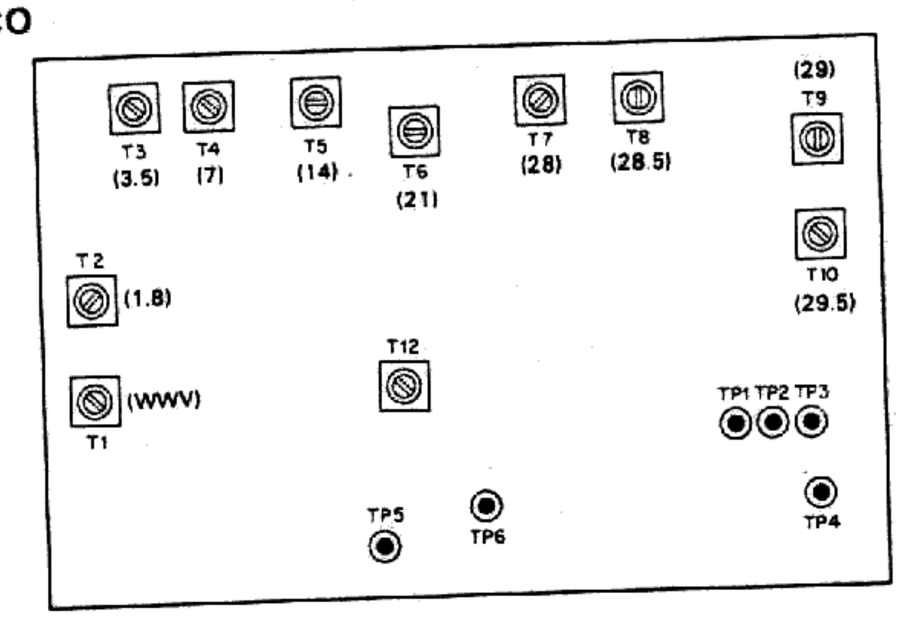


**Fig. 22 VCO unit**

### 2-3. Adjustment of antenna and MIX coil

1. Measuring instrument used
   SSG (or built-in marker)
   Since the tuned point may be deviated due to the shift of antenna impedance, be sure to terminate the antenna with 50 ohms.
2. Adjusting procedure
   DRIVE: Center (12 o'clock position)
   Apply SSG output (or marker signal) at 60 dB to the antenna terminal and adjust the coil pack unit (X44-1140-00) in the following procedure of bands for maximum AF output (S meter reading) and maximum sensitivity. Reduce the SSG output suitably as the sensitivity increases (refer to **Table 1**, **Fig. 23**).

# ADJUSTMENTS

COIL PACK

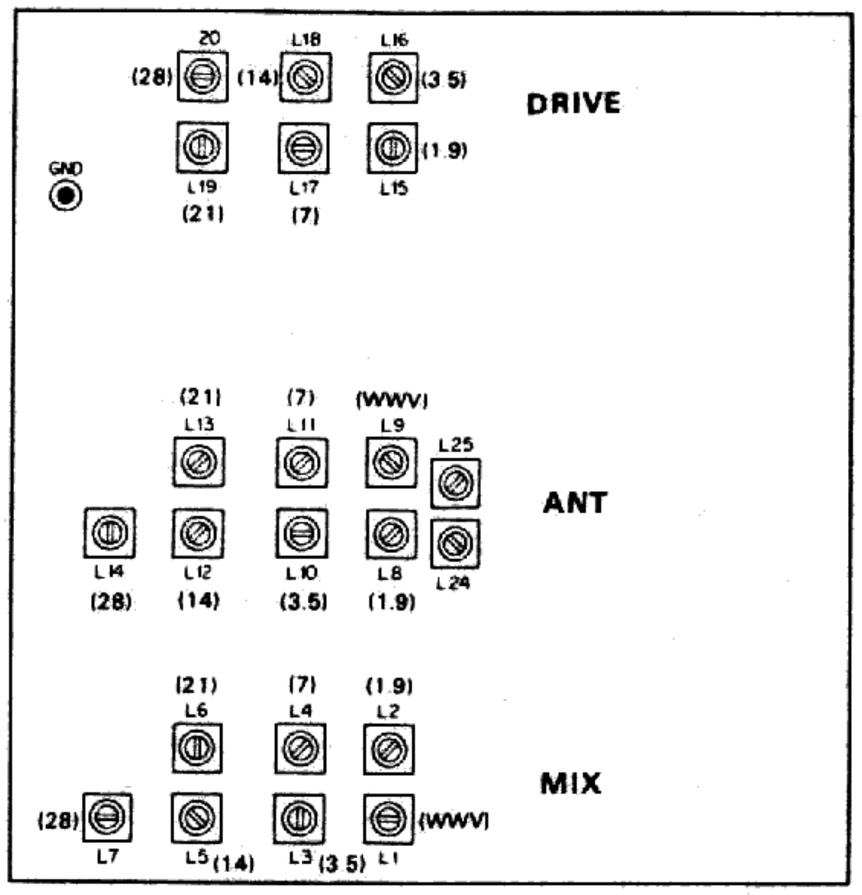


Fig. 23 Coil pack unit

| Adjusting sequence | BAND | VFO scale |
|---|---|---|
| 1 | 1.8 | 100 |
| 2 | 3.5 | 250 |
| 3 | 7 | 150 |
| 4 | 14 | 175 |
| 5 | WWV | 0 (15.0MHz) |
| 6 | 21 | 225 |
| 7 | 28.5 | 500 |

Table 1

## 2-4. IFT adjustment

1. Measuring instrument used: SSG (or marker)
2. Adjusting procedure
   1) Apply a signal of 14.175 MHz at 40 dB (or marker) to the antenna terminal from SSG.
   2) Adjust T1 to T7 in IF unit (X48-1150-00) and T2 in RF unit (X44-1150-00) until S meter reads maximum value (refer to **Fig. 24** and **Fig. 25**).

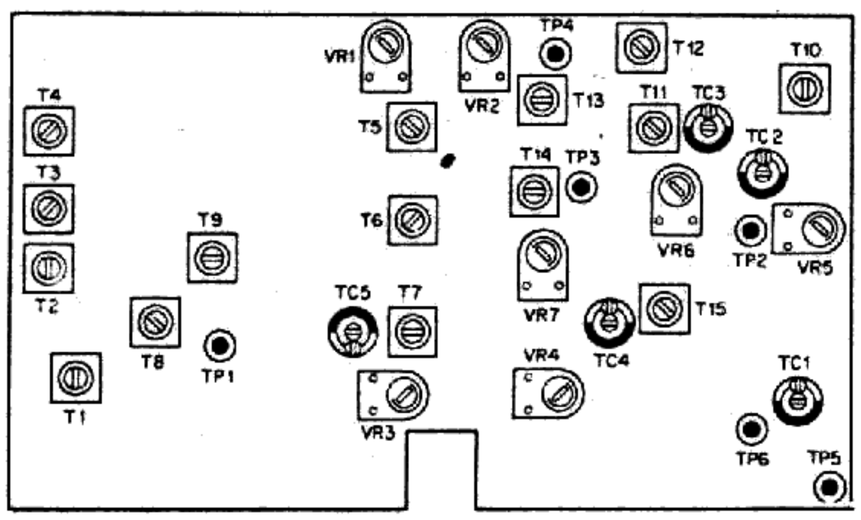

Fig. 24 IF unit

RF

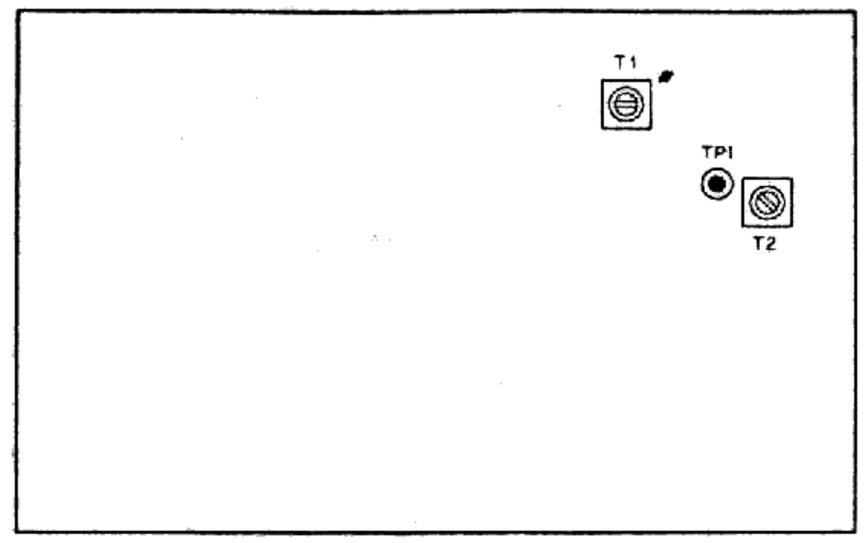

Fig. 25 RF unit

## 2-5. Adjustment of IF trap coil

1. Measuring instruments used
   1) SSG
   2) AF VTVM
   3) Dummy load for AF
2. Adjusting procedure
   BAND: 7 MHz
   VFO scale: 300
   1) Make connection as shown in **Fig. 26**, and adjust receiving sensitivity at maximum. Then, while applying a signal of 8830 kHz at approx. 100 dB from SSG, adjust L24 and L25 in the coil pack unit (X44-1140-00) alternately and repeat the same procedure two or three times. Until S meter reading becomes minimum. When S meter pointer does not deflect, make adjustment until AF output becomes minimum (refer to **Fig. 23** "Coil pack unit").

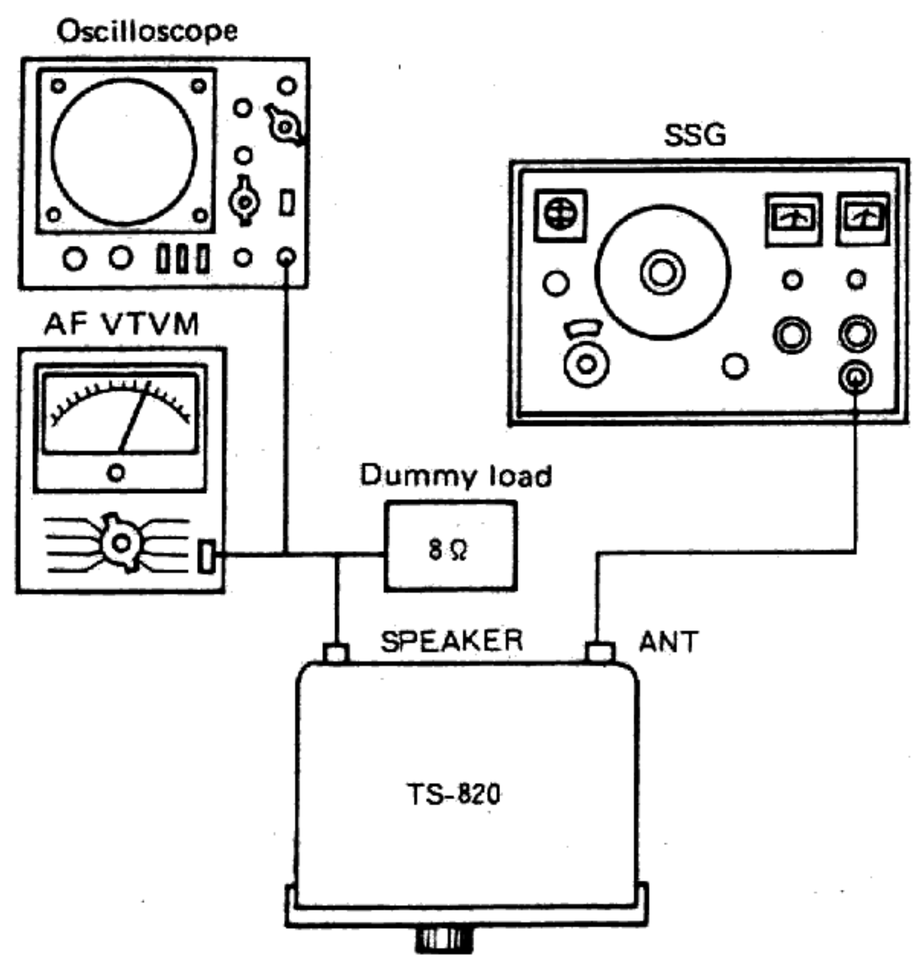


Fig. 26 Adjustment of IF trap coil

# ADJUSTMENTS

**2-6. Carrier balance adjustment**

1. Measuring instrument used: RF VTVM
2. Adjusting procedure
   IF SHIFT: O (center)
   1) Connect RF VTVM to IF OUT terminal on the rear panel.
   2) Turn the RF GAIN knob fully counterclockwise and adjust VR3 and TC5 in IF unit (X48-1150-00) alternately until the output becomes minimum (refer to **Fig. 24**).

**2-7. Adjustment of noise blanker (NB) circuit**

1. Measuring instrument used
   1) Voltmeter
   2) Noise generator
   3) Oscilloscope
2. Adjusting procedure

Simplified adjustment:

1) After receiving marker signal and turning ON NB switch, adjust T8 and T9 until the terminal voltage at TP1 on IF unit (X48-1150-00) becomes minimum (refer to **Fig. 24**).

Formal adjustment:

1) After making the simplified adjustment, connect the noise generator to the antenna and adjust drive VC until the noise output becomes maximum. In this case, set the S meter reading within S5 to S7.
2) Turn ON NB switch and connect the oscilloscope to the cathode side of D13 in IF unit. Adjust T1 in IF unit until the waveform changes from Figure A to Figure B (refer to **Fig. 27**).

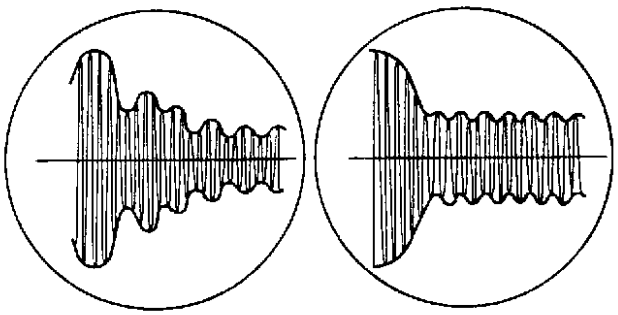

(a) Before adjustment (b) After adjustment

**Fig. 27 Adjustment of noise blanker**

3) Then, fine adjust T1, T3, T8 and T9 so that noise from the speaker becomes small, while taking care not to make waveform on the oscilloscope deviate from that shown in Fig. B greatly.
4) Turn ON RF switch and ATT switch and further fine readjust T1, T3, T8 and T9. Even when the RF and ATT switches are ON, the noise blanker should be effective.
5) In final stage, make sure that the receiving gain is not reduced greatly.

**2-8. Adjustment of S meter**

1. Measuring instrument used: SSG
2. Adjusting procedure
   1) After adjusting each section until sensitivity becomes minimum, adjust VR1 in IF unit (X48-1150-00) under no signal condition, thus making zero point adjustment of S meter (refer to **Fig. 24**).
   2) Connect SSG to the antenna terminal and apply 0 dB input. Adjust T6 in IF unit until S meter just starts deflecting at 0 dB.
   3) Set the output of SSG to 40 dB and adjust VR2 in IF unit until S meter reads S9.

**2-9. RIT adjustment**

1. Measuring instrument use: Unnecessary (use the built-in marker)
2. Adjusting procedure
   1) Set the RIT knob just to O (center) and turn ON RIT switch.
   2) Receive the maker signal and turn VFO until a beat of approx. 1 kHz is generated.
   3) Turn OFF RIT switch and adjust VR2 in AF AVR unit (X49-1080-00) until the beat frequency is kept unchanged when RIT switch is turned ON and OFF (refer to **Fig. 28**).

**AF-AVR**

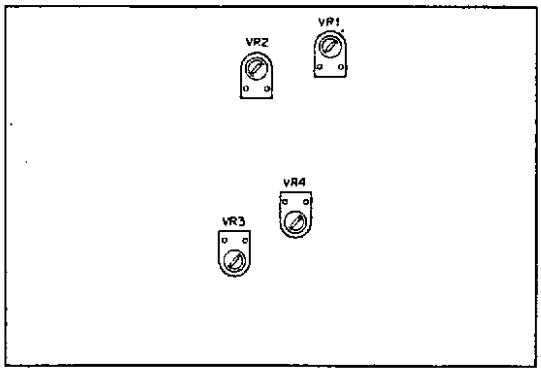


**Fig. 28 AF • AVR unit**

**2-10. Adjustment of marker frequency**

1. Measuring instrument used: Frequency counter
2. Adjusting procedure
   1) Connect the counter to the collector of Q4 in the marker unit (X52-0005-01) and open the MS terminal.
   2) Set the FUNCTION switch to CAL 25 kHz and adjust TC1 in the marker unit for 100,000 Hz ± 1 Hz (refer to **Fig. 29**).

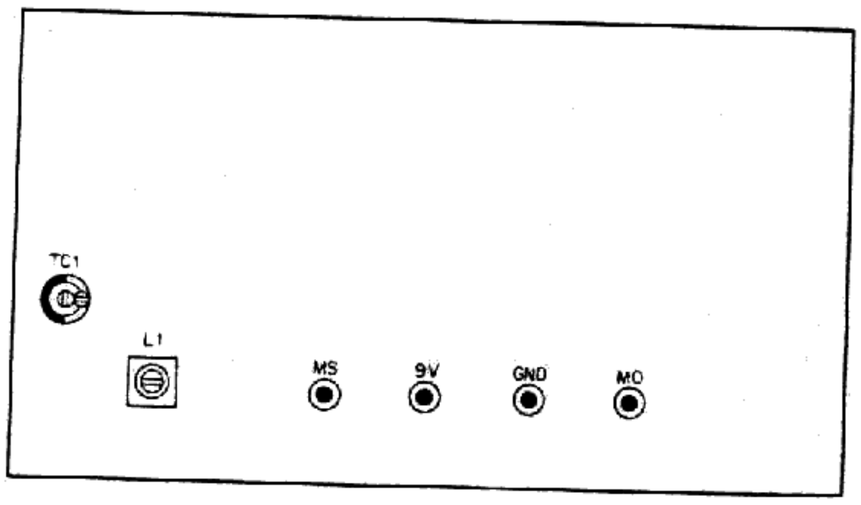


Fig. 29 MARKER unit

### 2-11. VFO adjustment

1. Measuring instruments used
   1) TF VTVM
   2) Frequency counter
2. Adjusting procedure

**Adjustment of oscillation frequency**

Set the FUNCTION switch to VFO and connect the frequency counter to VFO terminal (No. 13) on FIX VOX unit (X50-1350-00). Set VFO to 0 division and check if the oscillation frequency is 5.50 MHz. Then, set VFO to 500 division and check if the oscillation frequency is 5.00 MHz. If the frequency deviates from 5.50 MHz, correct it with TC1 in VFO unit; if the frequency deviates from 5.00 MHz correct it with L1 in VFO unit. Since TC1 and L1 affect mutual oscillation frequencies, repeat the above-mentioned adjustment three or four times (refer to **Fig. 30** and **31**).

**Adjustment of output voltage**

Set the VFO to the 250 division. Then, connect RF VTVM to VFO (No. 13) terminal in FIX-VOX unit and adjust trimmer TC2 in VFO unit until the output voltage becomes 0.6V.

**FIX • VOX**

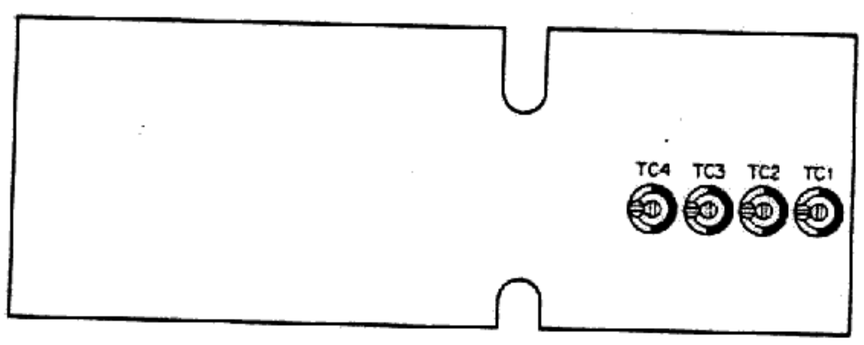


Fig. 30 FIX • VOX unit

**VFO**

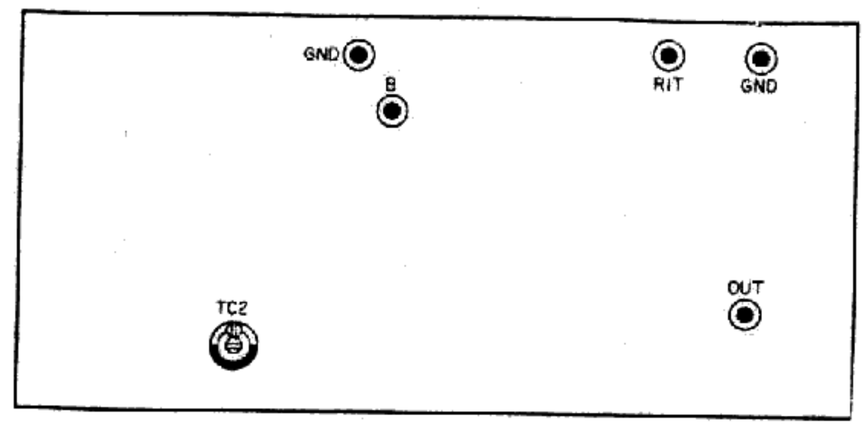


Fig. 31 VFO unit

## 3. Adjustment of Counter (DG-1: Optional)

### 3-1. Frequency adjustment of counter standard oscillator

Simplified adjustment:

1. Measuring instrument used: Counter and calibration cable
2. Adjusting procedure
   1) Insert the 1 pin plug side of the accessory counter calibration cable into X-VERTER IN terminal on the body rear panel and its 3-pin terminal side into the 3-pin terminal at the top of counter.

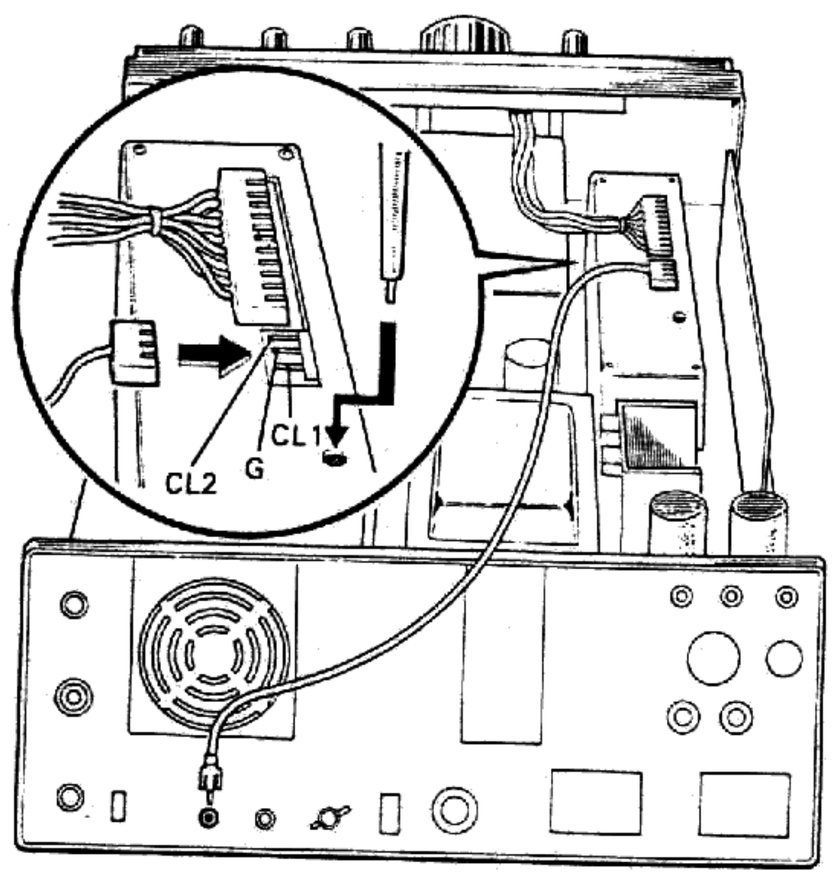


Fig. 32 Adjustment of counter standard oscillator frequency

   2) Set the BAND switch to WWV and connect the antenna to the set. While receiving a WWV signal of 15 MHz adjust trimmer TC1 at the top of the counter unit so that zero beat is obtained between this signal and 1 MHz signal connected in Item 1).

**NOTE:**

(1) Although zero beat can be checked through the speaker, adjustment by watching S meter reading is more accurate. S meter pointer vibrates on both near sides of the actual zero beat point. This corresponds to approx. 1 to 3 Hz. At the zero beat point, the pointer vibration becomes slowest.

(2) The adjustable range by TC1 is 1 MHz ± 20 Hz. In rough adjustment, receive a WWV signal of 15 MHz and set the counter reading within 15.000.0 and 14.999.9.

Formal adjustment:

1. Measuring instrument used: Frequency counter
2. Adjusting prrocedure
   1) Short circuit between CL2 and G in counter unit (X60-1020-00) and connect the output between G and CL1 to the frequency counter.
   2) Adjust the trimmer TC1 in the counter mix unit for 1 MHz ± 5 Hz (refer to **Fig. 33**).

**COUNTER MIXER**

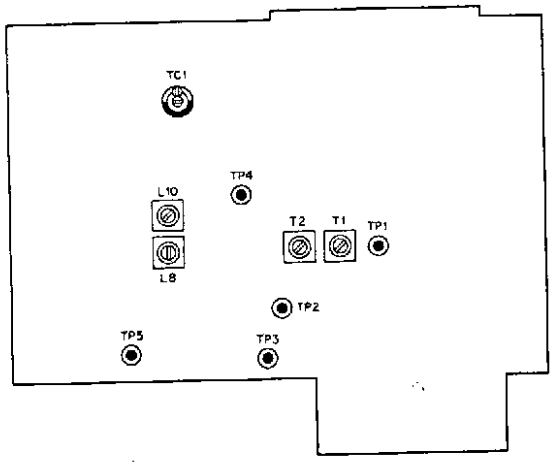


**Fig. 33 Counter mixer unit (DG-1: Option)**

### 3-2. Adjustment of counter input level

1. Measuring instrument used: RF VTVM
2. Adjusting procedure
   1) Connect RF VTVM to TP6 in IF unit (X48-1150-00) and adjust TC1 in IF unit for 0.1V (refer to **Fig. 24**).
   2) Connect RF VTVM to TP2 in the counter mixer unit (X48-1150-00) and adjust T1 and T2 in the same unit until the peak value is obtained (output is approx. 0.12 to 0.2V) (refer to **Fig. 33**).

**NOTE:**
In this case, apply a carrier voltage of 0.1V to the CCR terminal of the counter unit (by adjusting TC1 in IF unit).

## 4. Adjustment of Transmitter Section

### 4-1. Adjustment of drive coil

1. Measuring instrument used
   RF dummy load (50Ω)
   Since the tuned point deviates due to shift of the antenna impedance, be sure to connect this unit.
2. Adjusting procedure
   MODE: CW
   DRIVE: Center (12 o'clock position)
   METER: ALC
   1) Set BAND switch to 1.8 MHz and set STBY switch to SEND. Adjust T10 in IF unit (X48-1150-00), T1 in RF unit (X44-1150-00) and 1.8 MHz band drive coil in the coil pack unit (X44-1140-00) until ALC meter reads maximum (refer to **Fig. 23, 24, 25**).
   2) Adjust the drive coil of each band until ALC meter reads maximum. The adjusting sequence and adjustment frequency are the same as in Item 2-3 "Adjustment of Antenna MIX coil".

**NOTE:**
Make this adjustment at the same time as the adjustment of the receiving coil pack until the peak values of transmitting and receiving signals do not deviate from each other.

### 4-2. BIAS adjustment

1. Measuring instrument used: Unnecessary
2. Adjusting procedure
   Set the meter switch to IP and adjust the BIAS VR on the rear panel to 60mA.

### 4-3. Adjustment of carrier suppression

1. Measuring instrument used
   1) RF VTVM
   2) RF dummy load
   3) Directional coupler
2. Adjusting procedure
   1) Make connection as shown in **Fig. 34** and adjust 14.175 MHz EW until full power is obtained.

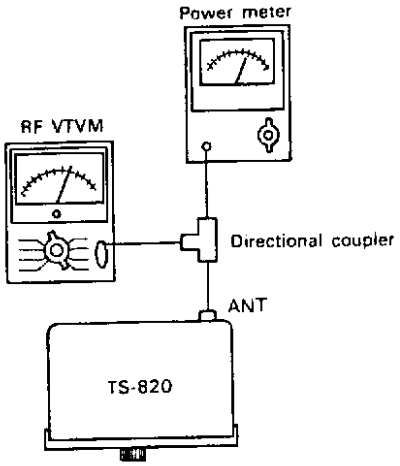


**Fig. 34 Adjustment of carrier suppression**

   2) Switch over MODE switch to USB and adjust VR5 and TC2 in IF unit (X48-1150-00) alternately until RF VTVM reads minimum. Also, make adjustment until the USB and LSB levels become the same (refer to **Fig. 24**).

### 4-4. Neutralization adjustment

1. Measuring instruments used
   1) RF VTVM
   2) RF dummy load

2. Adjusting procedure
   MODE: CW
   SG SW: ON
   Neutralizing variable capacitor: Half-inserted position
   1) In **Fig. 34**, make adjustment until maximum output is obtained at 21.225 MHz.
   2) Turn OFF the SG switch and adjust the neutralizing capacitor until RF VTVM reads minimum.

### 4-5. Adjustment of carrier point

1. Measuring instruments used
   1) AG
   2) RF VTVM
   3) RF dummy load
   4) Directional coupler
2. Adjusting procedure
   1) In **Fig. 35**, connect AG to MIC terminal and apply an input of 1500 Hz at 5 mV.

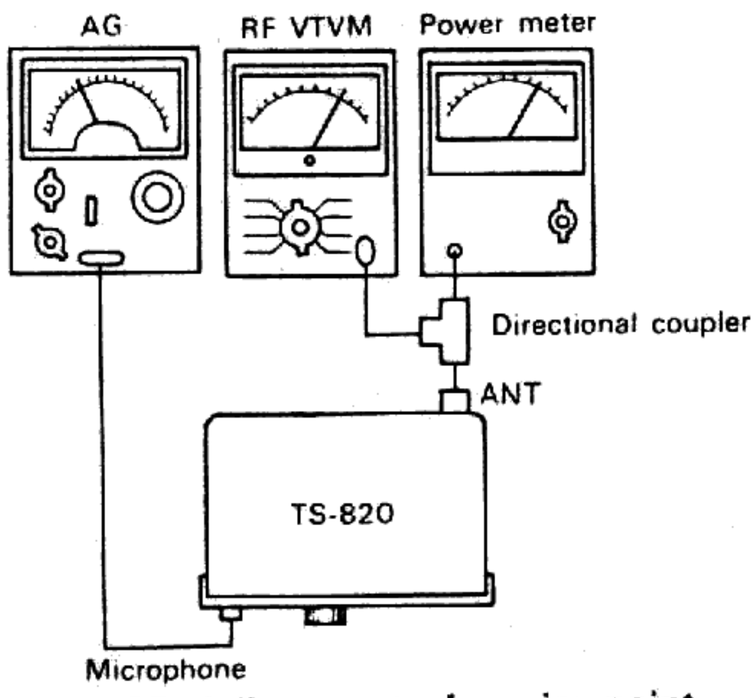


**Fig. 35 Adjustment of carrier point**

   2) Adjust DRIVE, PLATE and LOAD until maximum output is obtained.
   3) Adjust MIN GAIN until output becomes 50W and set the AG frequency to 250 Hz. Adjust VR1 in CAR1 unit (X50-1310-00) until RF VTVM reading is kept unchanged even when the MODE switch is changed over from USB to LSB and vice versa (refer to **Fig. 36**).
   4) Apply 5mV (at 1.5 kHz) signal to the microphone terminal and adjust MIC GAIN VR to obtain 50 Watts output. Then, shifting the signal frequency to 300 Hz or 2800 Hz and adjust TC1 (in LSB) and TC2 (in USB) so that RF VTVM reading is the same level.

CAR-1

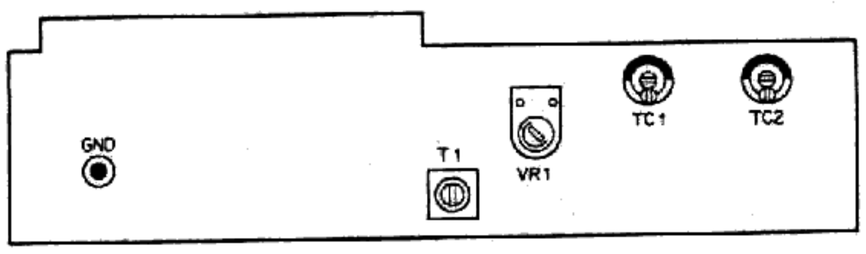


**Fig. 36 CAR 1 unit**

### 4-6. Adjustment of speech processor

1. Measuring instruments used
   1) AG
   2) AF VTVM
   3) Oscilloscope
   4) RF VTVM
   5) Frequency counter
2. Adjusting procedure
   1) MODE ..... USB
      COMP LEVEL .. Full clockwise
      PROCESSOR ... PULL
      METER ..... COMP
      MIC GAIN .. Center
      SG SW..... OFF
      ST BY..... SEND
   2) Connect a frequency counter to TP3. Adjust TC-4 to obtain the oscillation frequency of 451.4 kHz watching the counter readout.
   3) Apply a signal with the frequency of 1 kHz and the output of 0.3 mV into MIC JACK using an audio signal generator. Adjust T11, T12, T13, and T14 to obtain maximum level at TP-2.
   4) Set the audio signal generator to 1 mV, and adjust TC-3 and VR-6 to obtain maximum level at TP-2.

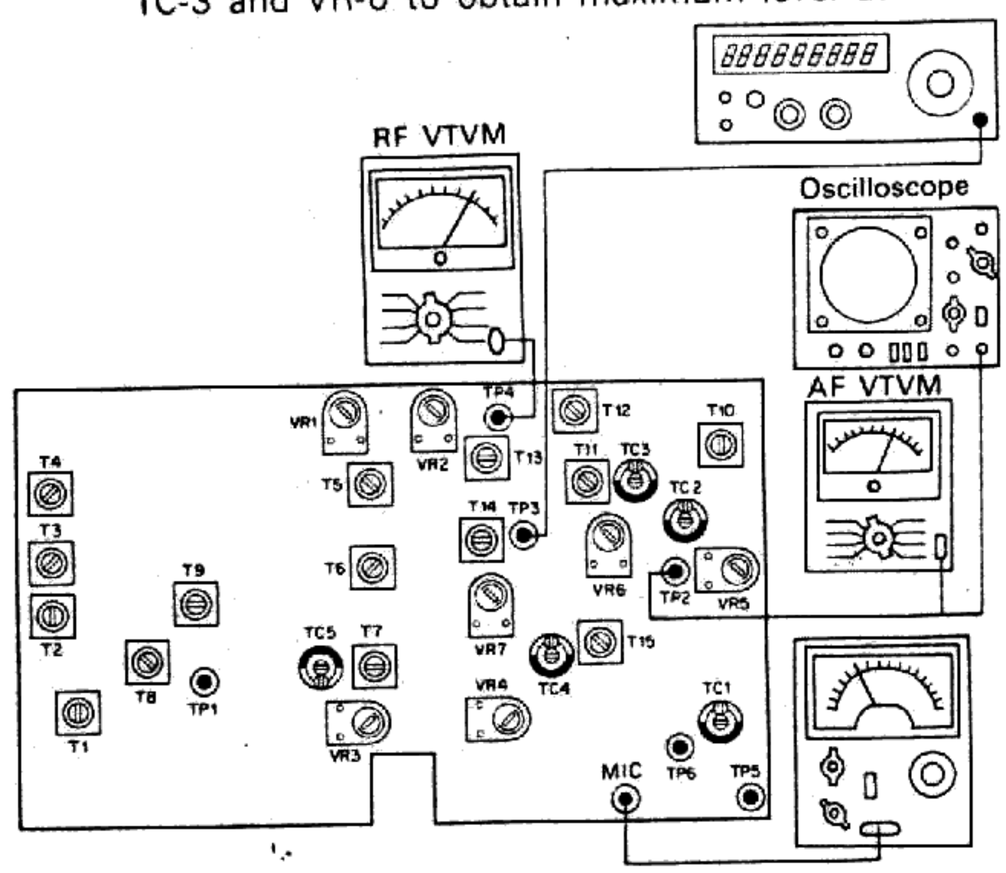


**Fig. 37 Adjustment of speech processor**

   5) Set the output of the audio signal generator to 0.3 mV at 1 kHz and make a note of the level at TP-2. Adjust finely TC-4 so that the level at TP-2 goes down to −6dB when the generator is set to 300 Hz. Adjust the oscillation frequency to below 451.5 kHz, and the level at TP-2 to become −6dB for the first time when the oscillation frequency is gradually increased from around 450 kHz.
   6) Give the MIC jack a signal with 10 mV at 1 kHz. Adjust VR-7 to obtain the same level at TP-2 regardless of whether the PROCESSOR switch is turned to NORMAL or PROCESSOR position.
   7) After completing these adjustments, set the generator output to 0.3 mV. When the generator frequency is swept from 400 Hz to 2 kHz, the TP2 level deflection from the level at 1 kHz should be within +1 dB ~ −5 dB. The noise level measured at TP2 should be 10 mV or less with the MIC input shorted-circuited by 47 kΩ.
   8) Confirm that the COMP LEVEL METER pointer indicates the range within 20 ~ 40 dB when giving MIC input a 10 mV − signal at 1 kHz.

### 4-7. Adjustment of monitoring level

1. Measuring instruments used
   1) RF dummy load
   2) AG
   3) AF VTVM
   4) AF dummy load
2. Adjusting procedure

# ADJUSTMENTS

Simplified adjustment:

1) Set the FUNCTION switch to CAL 25 kHz and take a beat of approx. 1000 Hz. Set AF variable resistor to a desired volume.
2) Apply a voice signal to the MIC terminal, turn ON the MON switch, and set STBY switch to SEND. Adjust VR4 in IF unit (X48-1150-00) until the monitor output level becomes nearly the same as the maximum output during calibration (refer to **Fig. 24**).

Formal adjustment:

1) If **Fig. 38**, make adjustment until full power is obtained at 14.175 MHz, CW, and set the MODE switch to SSBè (or LSB).

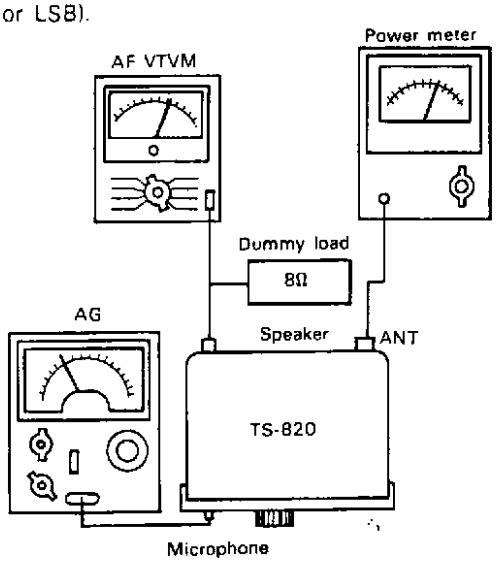


**Fig. 38 Adjustment of monitor level**

2) Apply a signal of 1000 Hz at 5 mV from AG to the MIC terminal and set the FUNCTION switch to CAL 25 kHz. Adjust AF GAIN until the AF output level becomes 0.63V when AGC is turned ON in receiving condition.
3) Then, turn ON the MON switch and set the STBY switch to SEND. Adjust VR4 in IF unit (X48-1150-00) until the monitor output level becomes 0.63V.

### 4-8. Adjustment of VOX operation

1. Measuring instruments used
   1) AG
   2) Microphone
   3) RF dummy load
2. Adjusting procedure
   SG SW: OFF
   VOX: ON
   MODE: SSB
   1) Connect AG to the MIC terminal and apply a signal of 1500 Hz at 5 mV. Adjust VOX GAIN VR until the relay is operated.
   2) Adjust VOX DELAY VR, and make sure that the time constant changes in VOX. Then, adjust the time constant for approx. 1 sec.
   3) Connect the microphone to the MIC terminal and keep the microphone approx. 10 cm or less away from the speaker. Set the FUNCTION switch to CAL 25 kHz and receive a signal. Turn ANTI VOX VR until VOX fluctuation is stopped.

### 4-9. Adjustment of side tone

1. Measuring instruments used
   1) AF VTVM
   2) Oscilloscope
   3) AF dummy load (8Ω)
   4) Key (shorting lead also usable)
2. Adjusting procedure
   SG SW: OFF
   MODE: CW
   AF VR: 12 o'clock position
   STBY: SEND
   1) In **Fig. 39**, adjust VR3 in AF • AVR unit (X49-1080-00) until AF output becomes 50 mW (0.63 V/8Ω) with the key down (refer to **Fig. 28**).

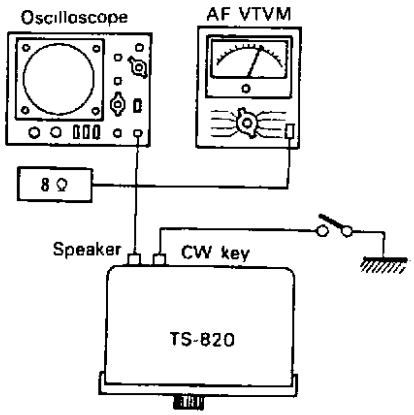


**Fig. 39 Adjustment of side tone**

### 4-10. Adjustment of RF meter

1. Measuring instrument used: RF dummy load
2. Adjusting procedure
   SG SW: ON
   MODE: CW
   BAND: 14
   1) Connect the RF dummy load to the antenna and make adjustment until the transmitting output becomes maximum at 14.175 MHz.
   2) Set the meter switch to RF and adjust RF VR on the rear panel until the RF meter reads 250 mA on the IP scale.

## 5. PLL Adjustment

### 5-1. Adjustment of PD unit

#### 5-1-1. BPF adjustment

1. Measuring instruments used
   1) Oscilloscope
   2) Sweep generator
   3) Detector (refer to **Fig. 40**)

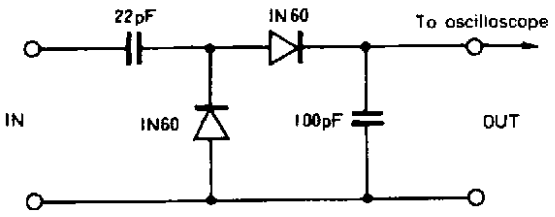


**Fig. 40 Detector**

2. Preparatory work
   Extract PLL unit from the body, remove the shield cover and disconnect connector PLL-1. When this connector is disconnected, the ground of the unit is floated partially. Thus, connect the shielding case in PD unit to the body (TS-820) with a suitable clip wire. Set the band to the desired position.
3. Adjusting procedure
   1) Connect the detector to TP1 (or TP2) in PD unit (X50-1340-00) and connect its output to the oscilloscope (refer to **Fig. 41**).
   2) Ground TP3 in PD unit and connect the sweep generator output to CIB-BND connector terminals.
   3) Adjust T1 (red), T2 (yellow) and T3 (red) in PD unit until the output waveform becomes as shown in **Fig. 42**.

**PD**

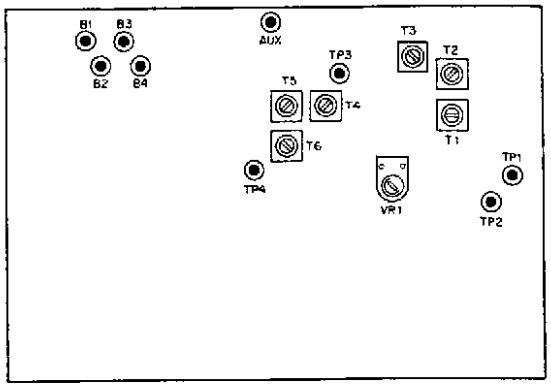


**Fig. 41 PD unit**

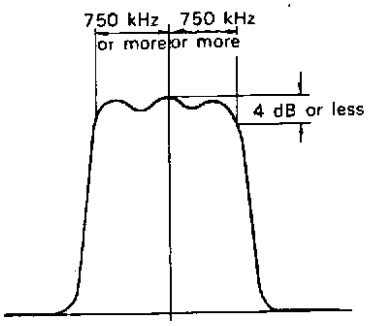


**Fig. 42 Output waveform**

**NOTE:**
(1) This band width should be 5.25 MHz ± 750 kHz or more and the valley depth should be 4 dB or less.
(2) Set the oscilloscope to maximum sensitivity and set the sweep output to as low output level as possible.

### 5-1-2. Adjustment of balance VR

1. Measuring instruments used
   1) SSG
   2) RF VTVM
2. Preparatory work
   1) Follow the same procedure as in 5-1-1.
   2) Disconnect connect PLL-3 and set the band to the desired position within 21 to 29.5.
3. Adjusting procedure
   Apply a signal of 8.83 MHz within 106 to 108 dB from SSG between connector terminals CIB and GND and adjust VR1 until the output of RF VTVM connected to TP1 (or TP2) becomes minimum dip (refer to **Fig. 41**).

## 5-2. Adjustment of VCO unit

### 5-2-1. Adjustment of VCO coil

Simplified adjustment:

1. Measuring instrument used: Voltmeter
2. Adjusting procedure
   1) Connect the voltmeter to TP4 in VCO unit (X50-1330-00). Keep the slide switch in VCO unit to NOR side (refer to Fig. 22).
   2) Set the VFO scale to 250 and adjust oscillation coils T1 through T10 until the voltmeter reads 3.2V.

**NOTE:**
(1) When VFO is changed from 0 to 500, the voltmeter reading should changed proportionally.
(2) In a band more than 21 MHz, there are two tuned points of 3.2V. The proper tuned point is obtained when the core is inserted into the printed circuit board side. In an improper tuned point, the voltage is kept unchanged regardless of turning of VFO.

Formal adjustment:

1. Measuring instrument used: Frequency counter
2. Adjusting procedure
   1) Turn the slide switch S1 in VCO unit (X50-1330-00) to TUN side and connect the counter between TP5 and TP6 (GND).
   2) Adjust the individual coils shown in the following list to the relevant set frequencies.
   3) Short circuit between TP1 and TP2 in VCO unit and measure frequency. Then, short circuit between TP2 and TP3 and readjust frequency, and check if the difference between two frequencies lies in the variable range shown in the following list.

# ADJUSTMENTS / REFERENCE DATA

| Band | Coil | Set frequency | Variable range |
|---|---|---|---|
| WWV | T 1 | 24.08 MHz | ±450 kHz or more |
| 1.8 | T 2 | 10.88 MHz | ±330 kHz or more |
| 3.5 | T 3 | 12.58 MHz | ±350 kHz or more |
| 7 | T 4 | 16.08 MHz | ±400 kHz or more |
| 14 | T 5 | 23.08 MHz | ±500 kHz or more |
| 21 | T 6 | 30.08 MHz | ±500 kHz or more |
| 28 | T 7 | 37.08 MHz | ±500 kHz or more |
| 28.5 | T 8 | 37.58 MHz | ±500 kHz or more |
| 29 | T 9 | 38.08 MHz | ±500 kHz or more |
| 29.5 | T10 | 38.58 MHz | ±500 kHz or more |
| AUX | T11 | Received signal +8.83 MHz | ±500 kHz or more |

Table 2

### 5-2-2. Adjustment of trap coil

1. Measuring instruments used
   1) SSG
   2) AF VTVM
2. Adjusting procedure
   1) Connect SSG through a capacitor to the cathode side (the line connected to R28, 47Ω) of diodes D1 to D11 in VCO unit (X50-1330-00) under receiving condition.
   2) Set the BAND switch to 29.5 position, and receive a signal of 8.83 MHz from SSG and then make arrangement so that a suitable beat comes out of AF output. Adjust TR in VCO unit until the beat output becomes minimum.

## REFERENCE DATA

Counter Mix Unit IC6 (μPB2490)

**Truth Value List (8 segments)**

| | Input | | | | | Output | | | | | | | |
|---|---|---|---|---|---|---|---|---|---|---|---|---|---|
| | BI | D | C | B | A | a | b | c | d | e | f | g | h |
| B | L | × | × | × | × | L | L | L | L | L | L | L | L |
| 0 | H | L | L | L | L | H | H | H | H | H | H | L | L |
| 1 | H | L | L | L | H | L | L | L | L | L | L | L | H |
| 2 | H | L | L | H | L | H | H | L | H | H | L | H | L |
| 3 | H | L | L | H | H | H | H | H | H | L | L | H | L |
| 4 | H | L | H | L | L | L | L | L | L | L | H | H | H |
| 5 | H | L | H | L | H | H | L | H | H | L | H | H | L |
| 6 | H | L | H | H | L | H | L | H | H | H | H | H | L |
| 7 | H | L | H | H | H | H | H | H | L | L | H | L | L |
| 8 | H | H | L | L | L | H | H | H | H | H | H | H | L |
| 9 | H | H | L | L | H | H | H | H | H | L | H | H | L |
| 10 | H | H | L | H | L | L | L | L | L | L | L | L | L |
| 11 | H | H | L | H | H | L | L | L | L | L | L | L | L |
| 12 | H | H | H | L | L | L | L | L | L | L | L | L | L |
| 13 | H | H | H | L | H | L | L | L | L | L | L | L | L |
| 14 | H | H | H | H | L | L | L | L | L | L | L | L | L |
| 15 | H | H | H | H | H | L | L | L | L | L | L | L | L |

× = H or L

**Character shape**

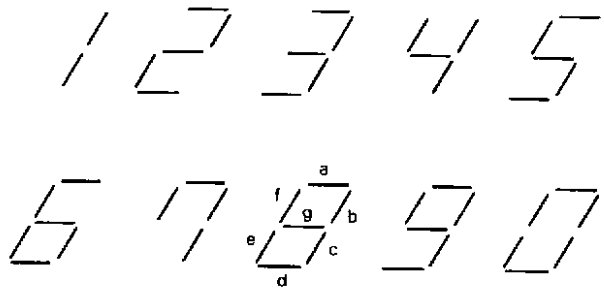


## TS-820 MODIFICATION FOR MARINE BAND (2.134 MHz)

1. Receiver section
   Set the driver knob to the center position. Adjust the ANT coils and RF coils to obtain maximum sensitivity at 2.0 MHz. As a result, the frequency range of 1.80 MHz ~ 2.136 MHz can be covered.
2. Transmitter section
   1) Set the driver knob to the center position. Adjust the drive coil to obtain maximum output power at 2.0 MHz.
   2. Remove two capacitors C4 (390 PF) and C31 (12 PF) of the plate VC and install a 330 PF (3 kV) capacitor.
   3) Remove the load fixed capacitor C26 (220 PF). By these modifications, the frequency range of 1.86 MHz ~ 2.15 MHz can be covered.

# ▼ IF (X48-1150-00)

IF UNIT (X48-1150-00)

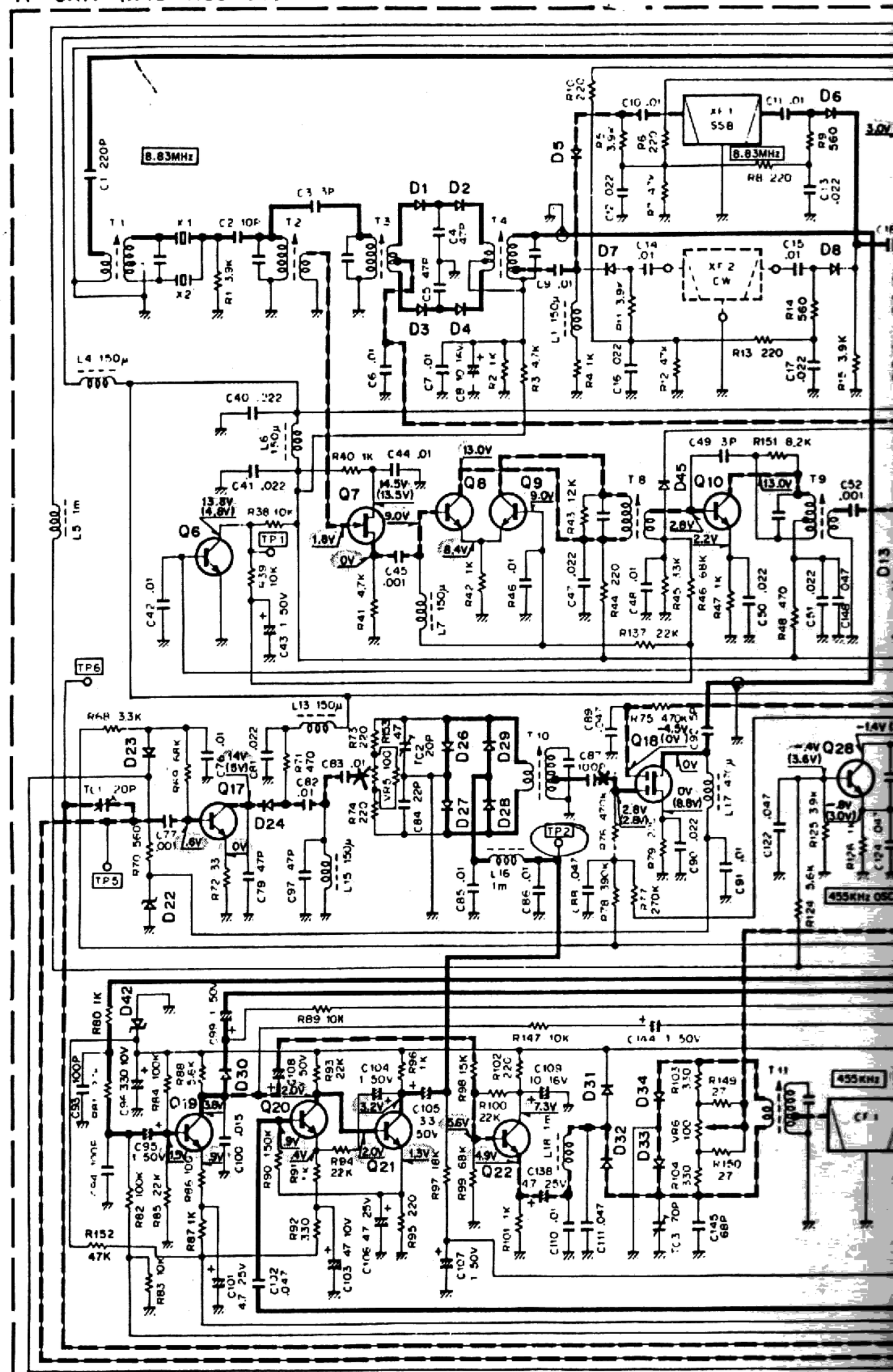

# CIRCUIT DIAGRAM / PC BOARD

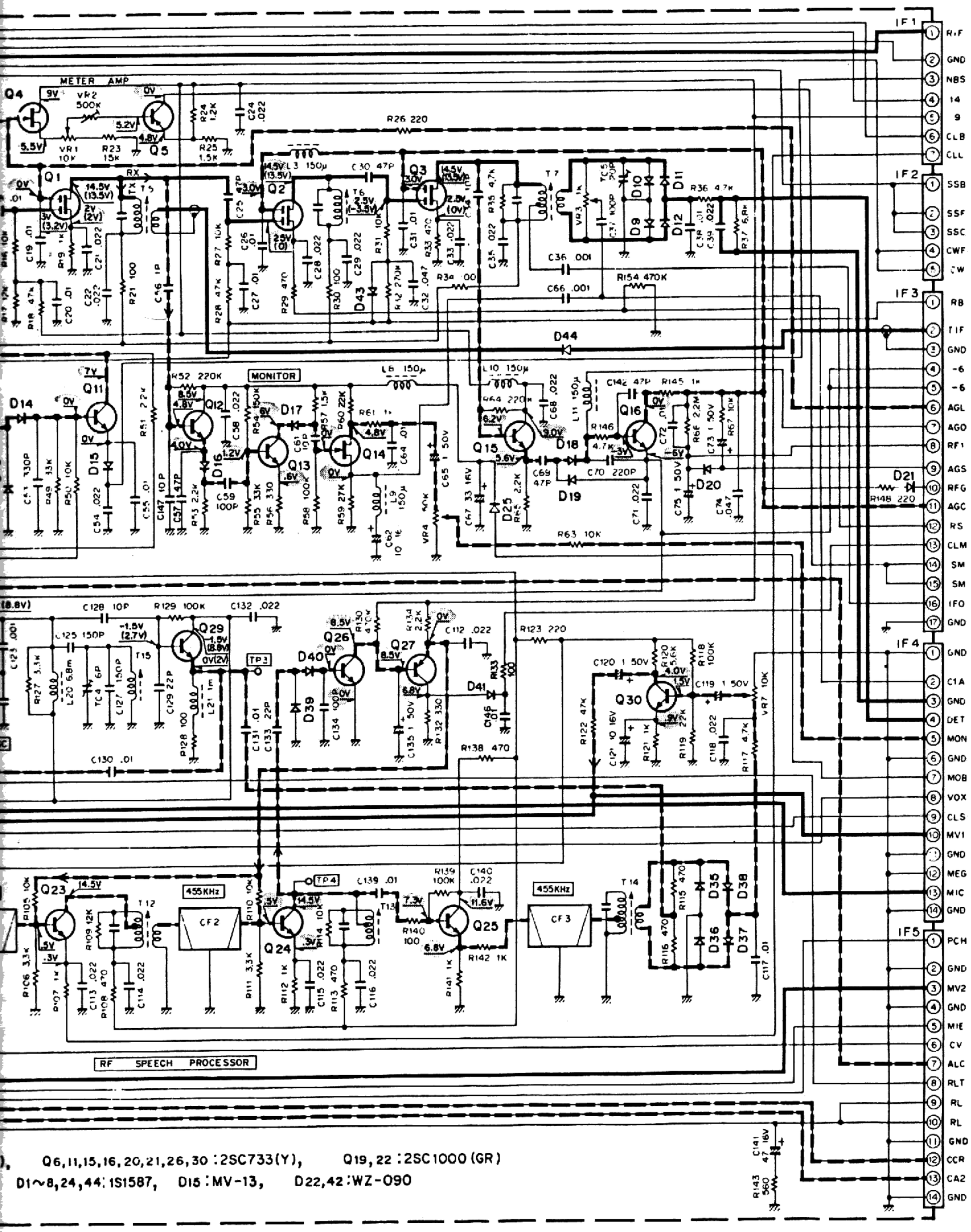


Q6,11,15,16,20,21,26,30 : 2SC733(Y), Q19,22 : 2SC1000 (GR)

D1~8,24,44: 1S1587, D15 : MV-13, D22,42 : WZ-090

← Carrier

# ▼ IF (X48-1150-00)

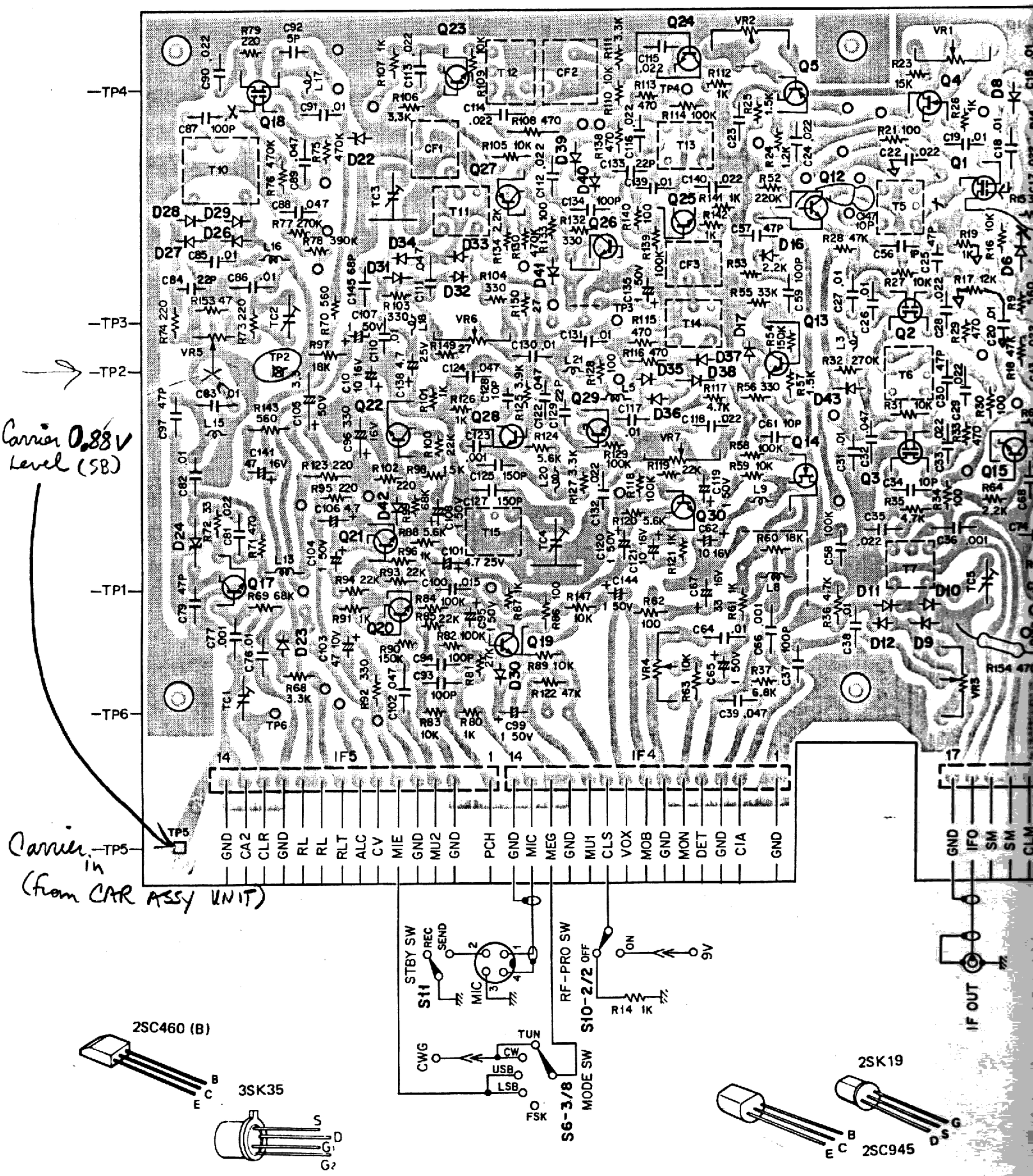


Q1～3,18: 3SK35(GR), Q4,7,14: 2SK19(GR), Q5,27: 2SA495(Y), Q6,
Q8～10,12,13,17: 2SC460(B), Q19,22: 2SC1000(GR), Q23～25,28,29:
D9～14,16～19,26～29,31～41: 1N60, D15: MV-13, D20,21,23,30,43: 1S15

# CIRCUIT DIAGRAM / PC BOARD

EC8
AU2

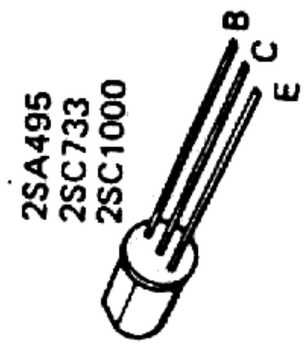


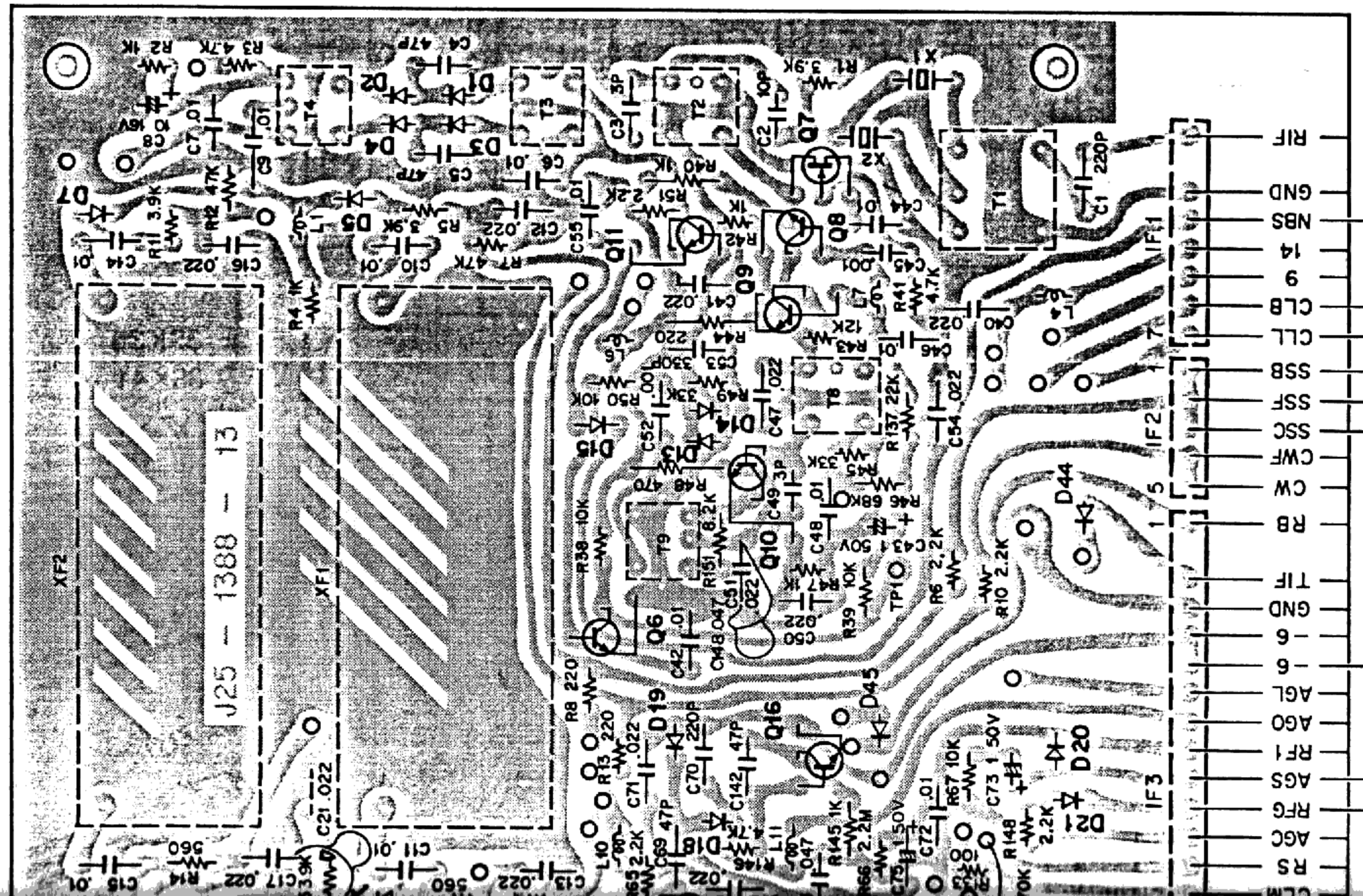


11,15,16,20,21,26,30: 2SC733(Y),
2SC945(R). D1~8,24: 1S1587,
555, D22,42: WZ-090

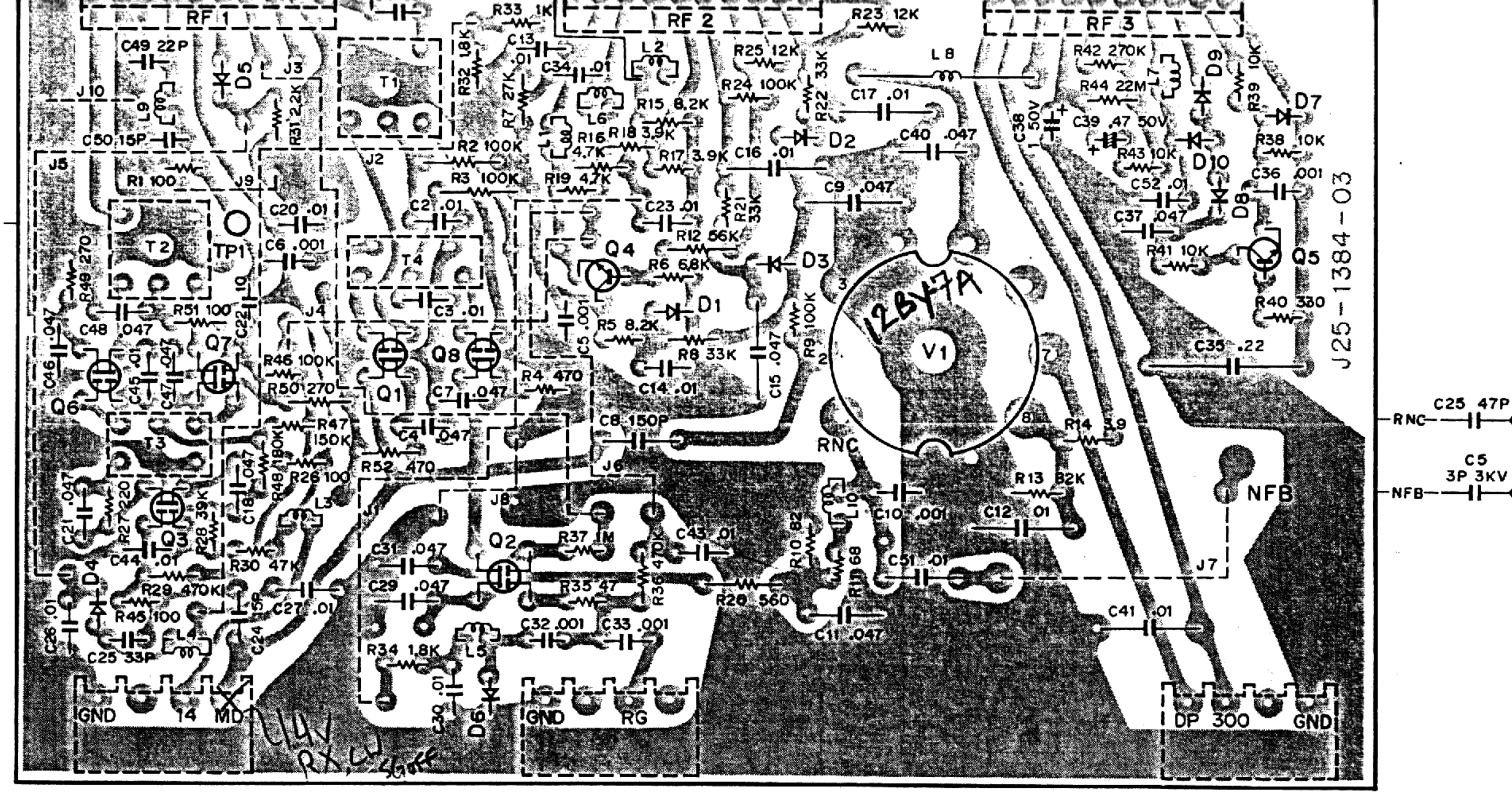


Q1,3,6～8: 3SK41(L), Q2: 3SK35(GR), Q4: 2SC733(Y), Q5: 2SC1515K(K), D1,8: WZ-090, D2,3,9,10: V06B, D4,6
1S2588, D5,7: 1S1555, V1: 12BY7A

# CIRCUIT DIAGRAM / PC BOARD

## ▼ RF (X44-1150-00)

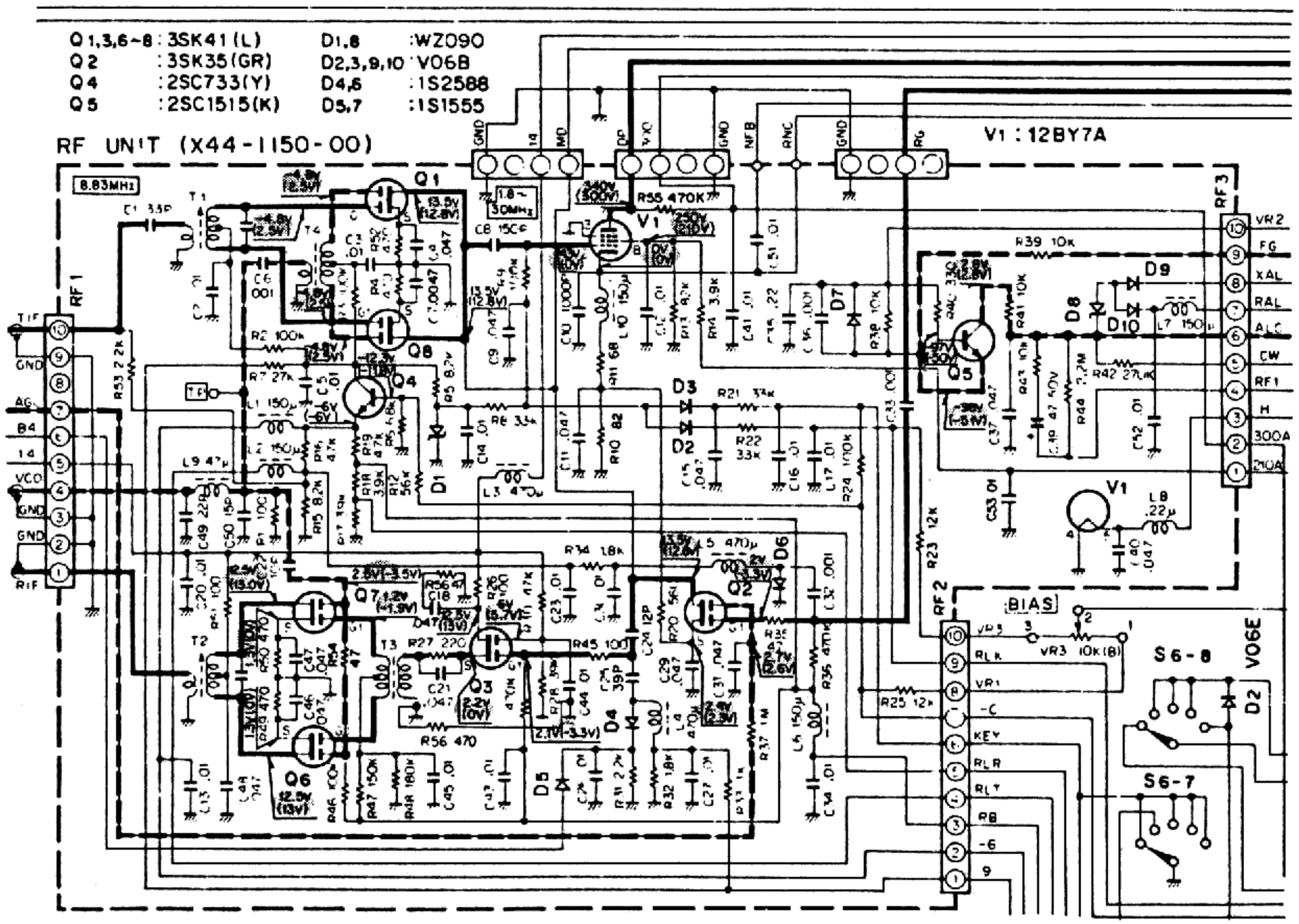


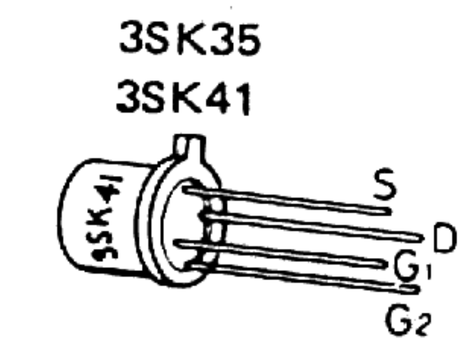


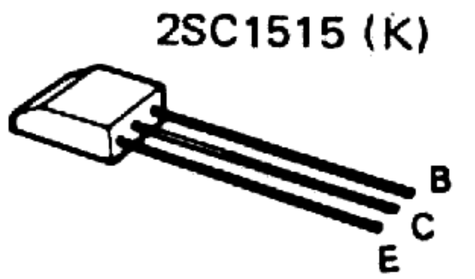


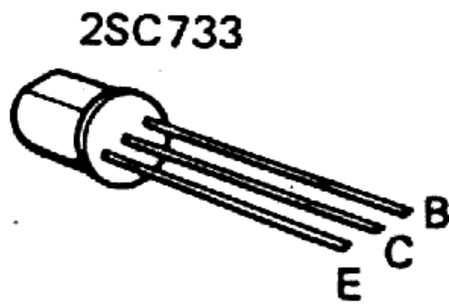


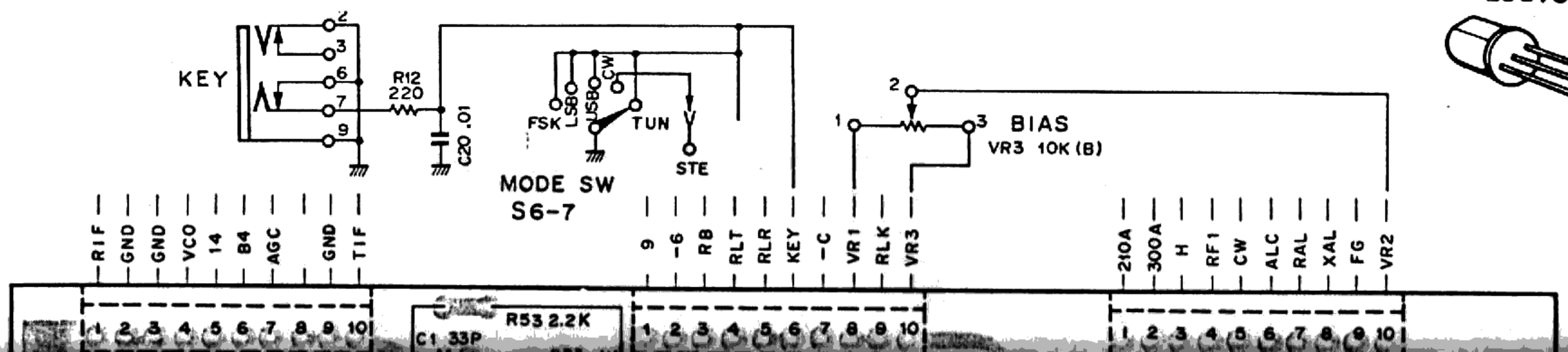

## ▼ AF-AVR (X49-1080-00)

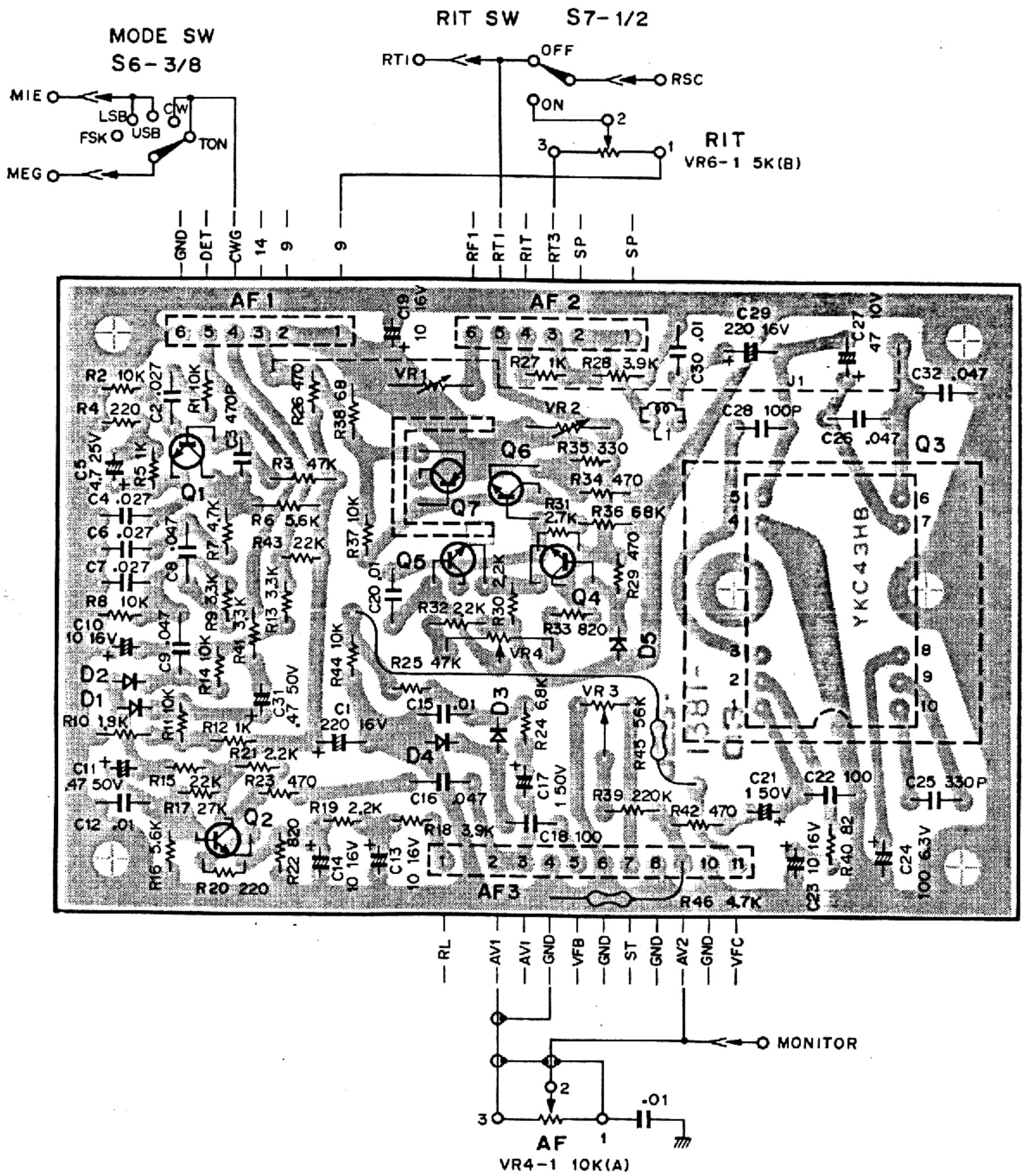


Q1,2: 2SC1000(GR)
Q3: TA7201P
Z4～6: 2SC372
Q7: 2SA496(Y)
D1,2: 1S1555
D3,4: 1N60
D5: WZ-061

# CIRCUIT DIAGRAM / PC BOARD

## ▼ AF-AVR (X49-1080-00)

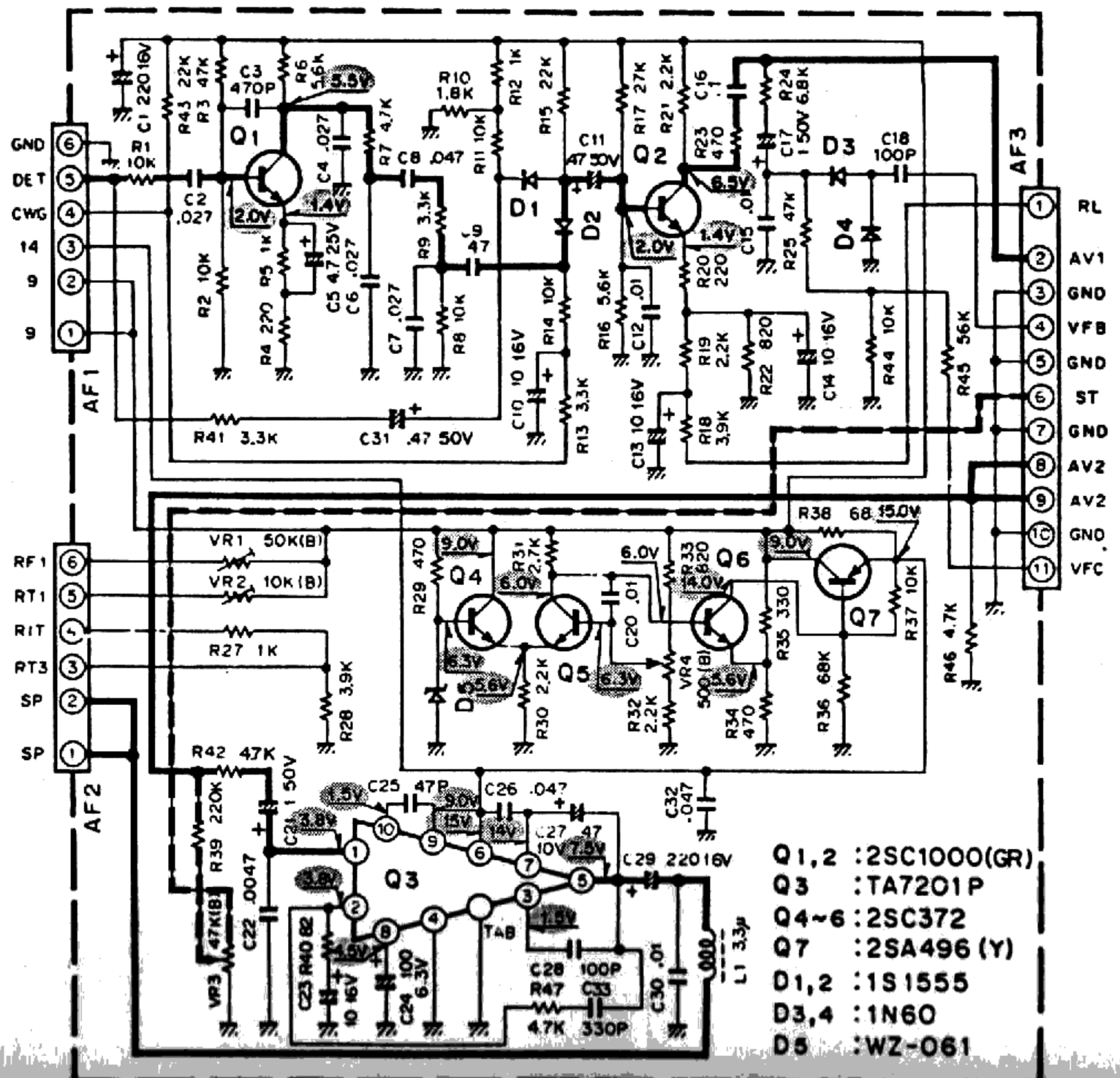


2SA562 (Y)
2SC1000
2SC372

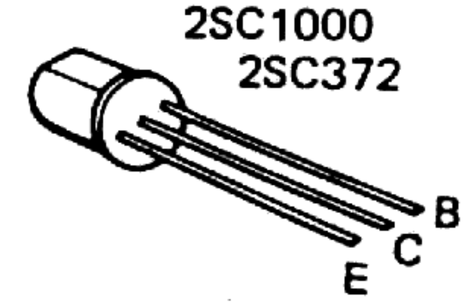


2SA496 (Y)

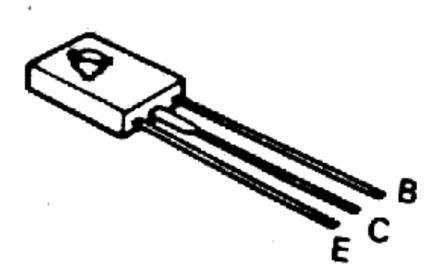


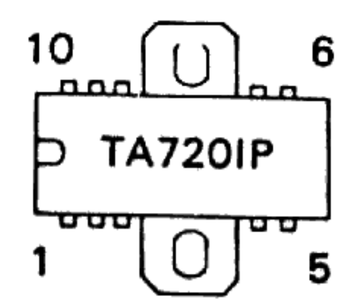

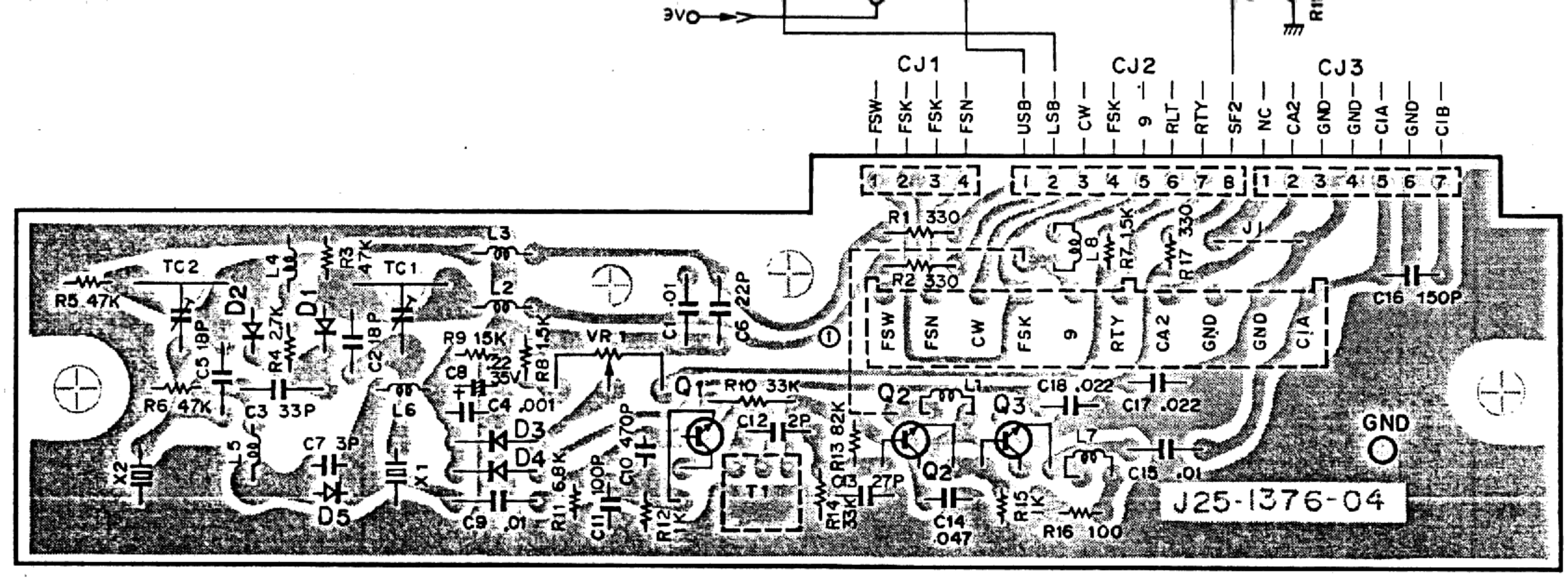


Q1,2: 2SC460(B). Q3: 2SC735(Y). D1～4: 1S1555. D5: ITT310

## ▼ CAR-II (X50-1320-00)

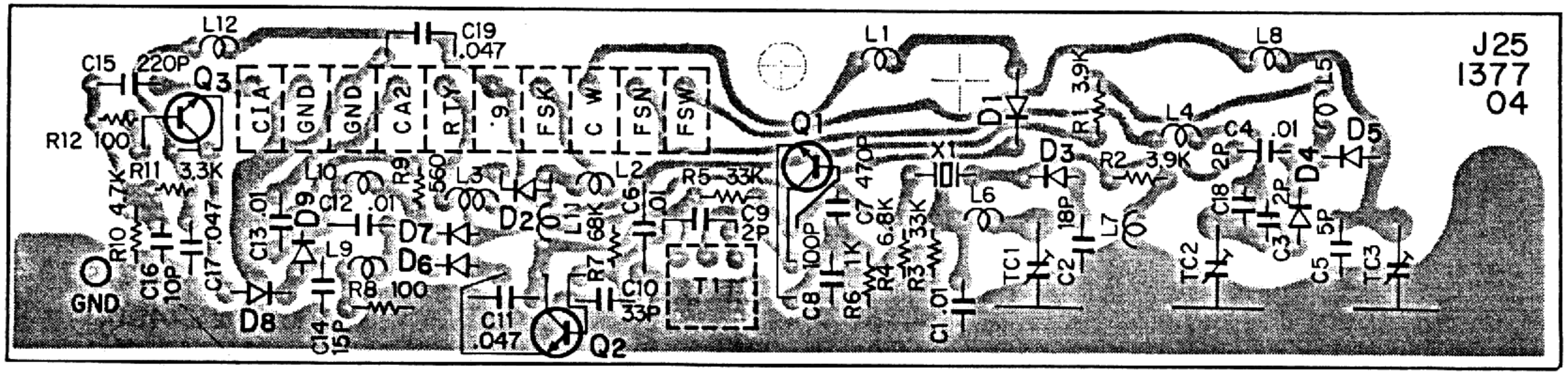


Q1～3: 2SC460(B). D1,2,6,7: 1S1555. D3～5: 1N60. D8,9: 1S2588

# CIRCUIT DIAGRAM / PC BOARD

## ▼ CAR ASSY (X60-1000-00)

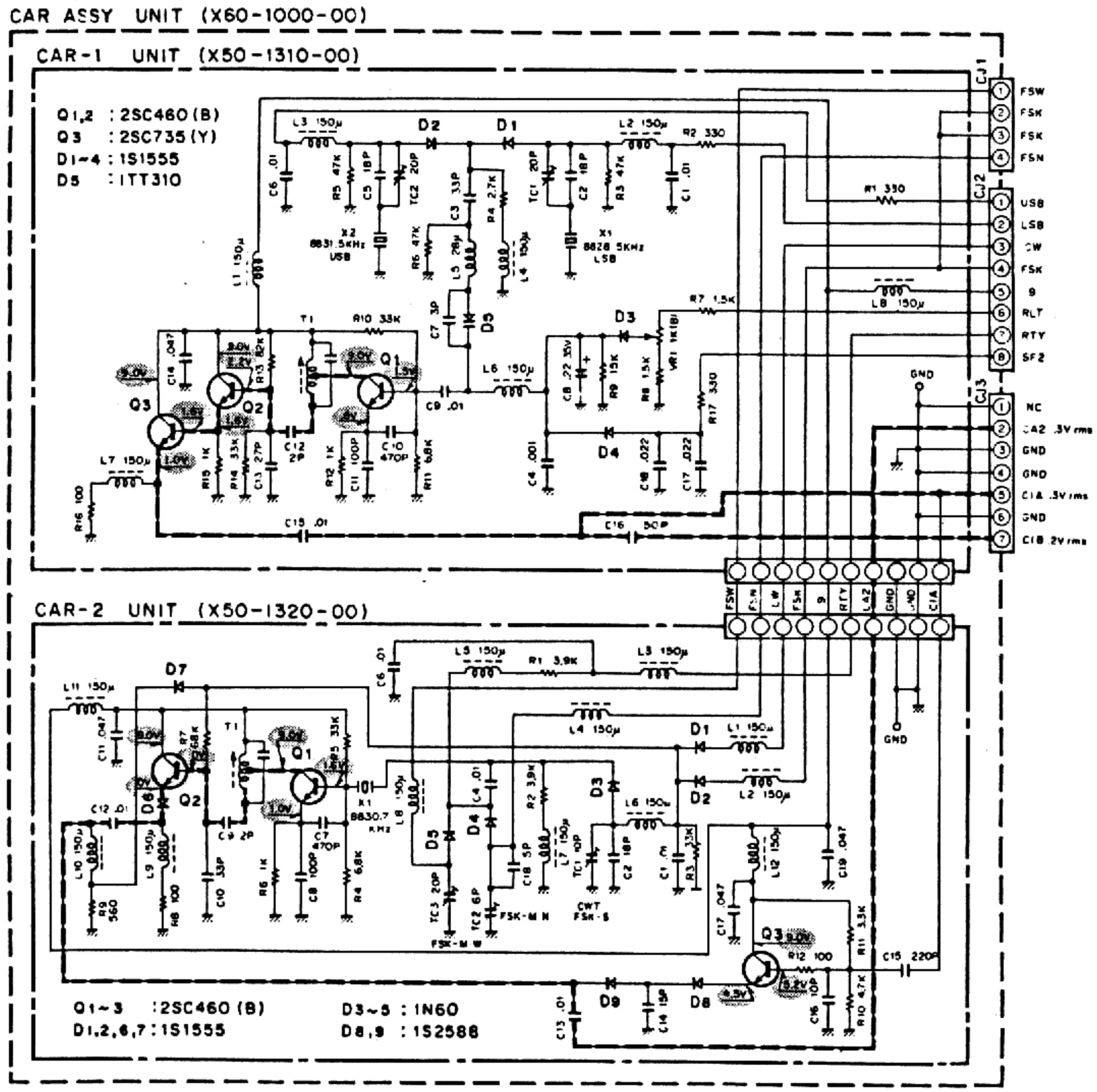


CAR FREQ

| MODE | FREQ (KHz) | OSC |
|---|---|---|
| LSB | 8828.5 | CAR1 |
| USB | 8831.5 | CAR1 |
| CW(TX) | 8830.7 | CAR2 |
| CW(RX) | 8831.5 | CAR1 |
| FSK Ⓢ | 8830.7 | CAR2 |
| FSK ⓂN | 8830.53 | CAR2 |
| FSK ⓂW | 8829.85 | CAR2 |
| FSK(RX) | 8828.5 | CAR1 |

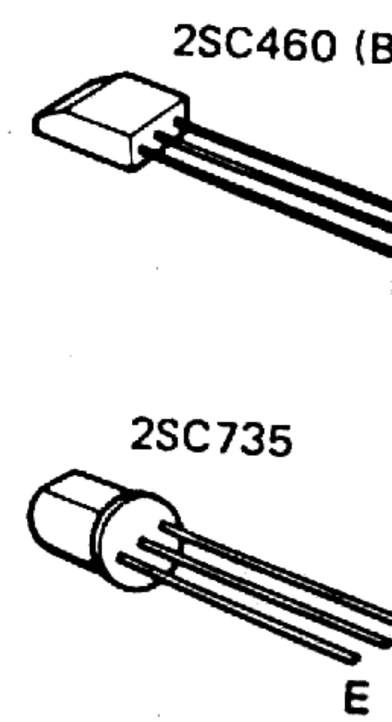


## ▼ CAR-I (X50-1310-00)

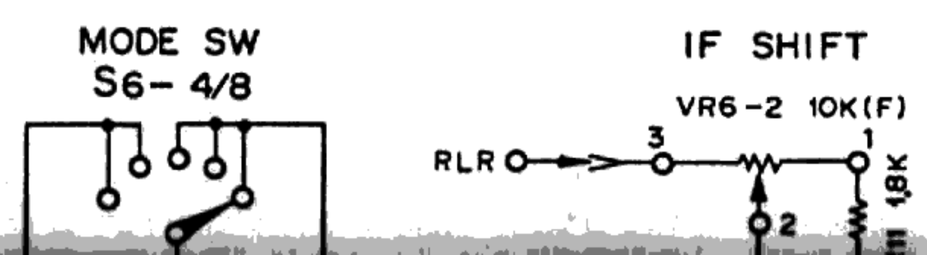

Q1 :2SK19 (GR)
Q2,3:2SC460 (B), Q4,5,7,8,10~12:2SC733(Y), Q6,9:2SA562(Y), Q13:2SC735(Y)
D24 :WZ-061

## ▼ FIX VOX (X50-1350-00)

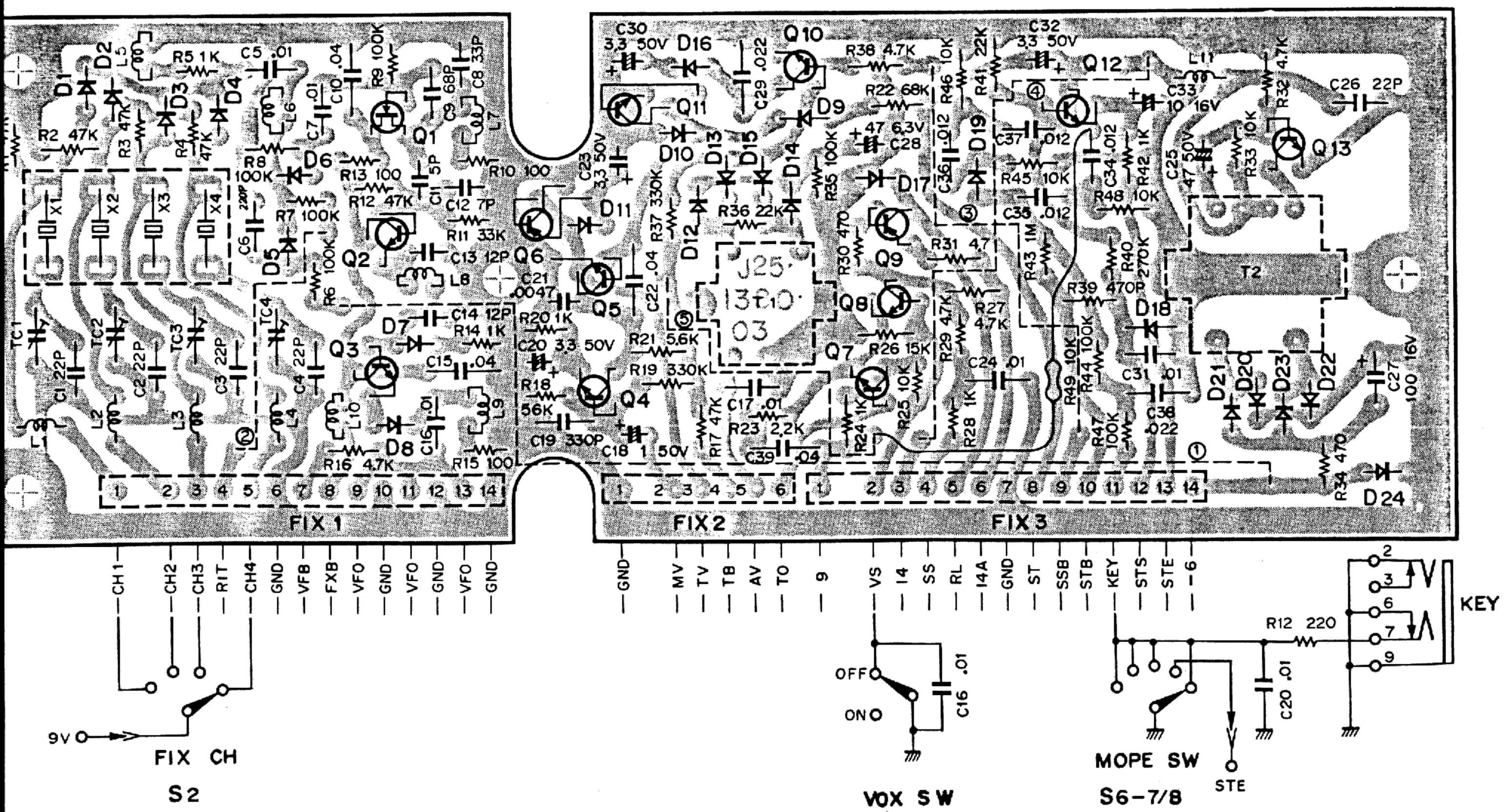


Q1: 2SK19(GR), Q2,3: 2SC460, Q4,5,7,8,10~12: 2SC733(Y), Q6,9: 2SA562(Y), Q13: 2SC735(Y), D1~4: 1S1587, D5,6: 1S658-2, D7,8,10,15,17: 1N60, D9,16,19~23: 1S1555, D18: WZ-130, D24: WZ-061

# CIRCUIT DIAGRAM / PC BOARD

## FIX • VOX (X50-1350-00)

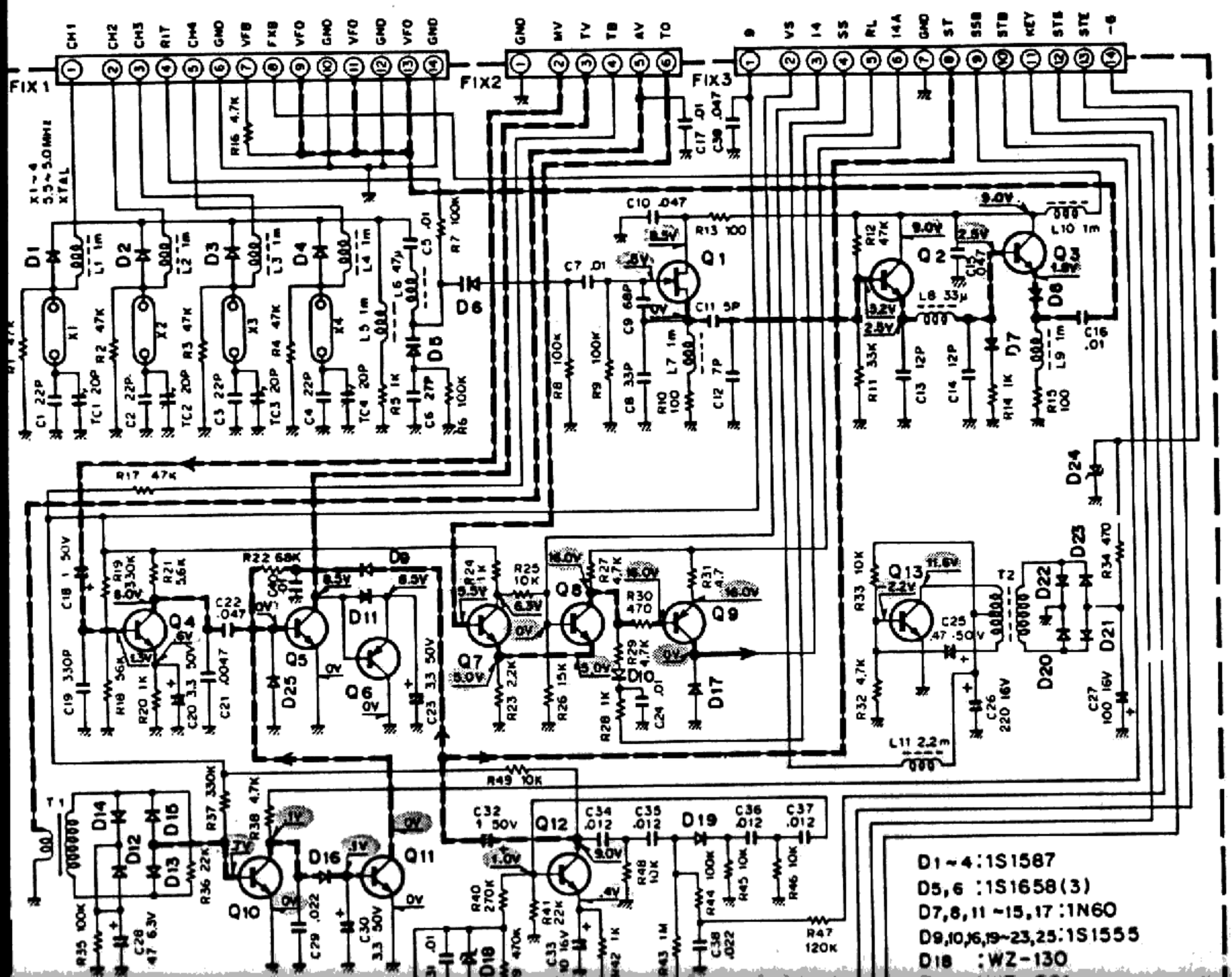


2SA562
2SC733
2SC735

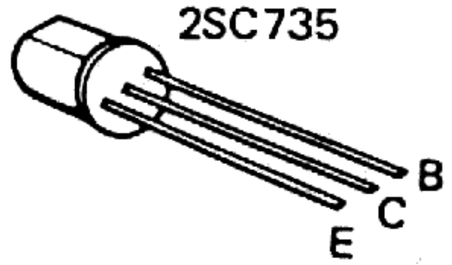


2SK19

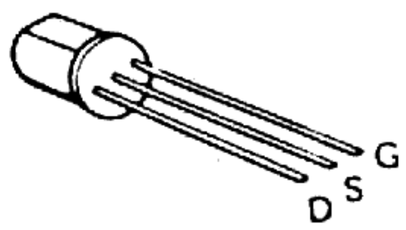


2SC460 (B)

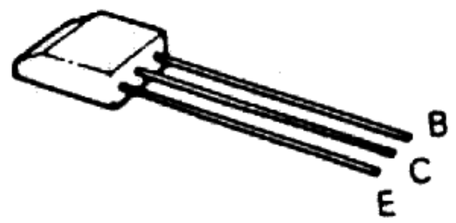

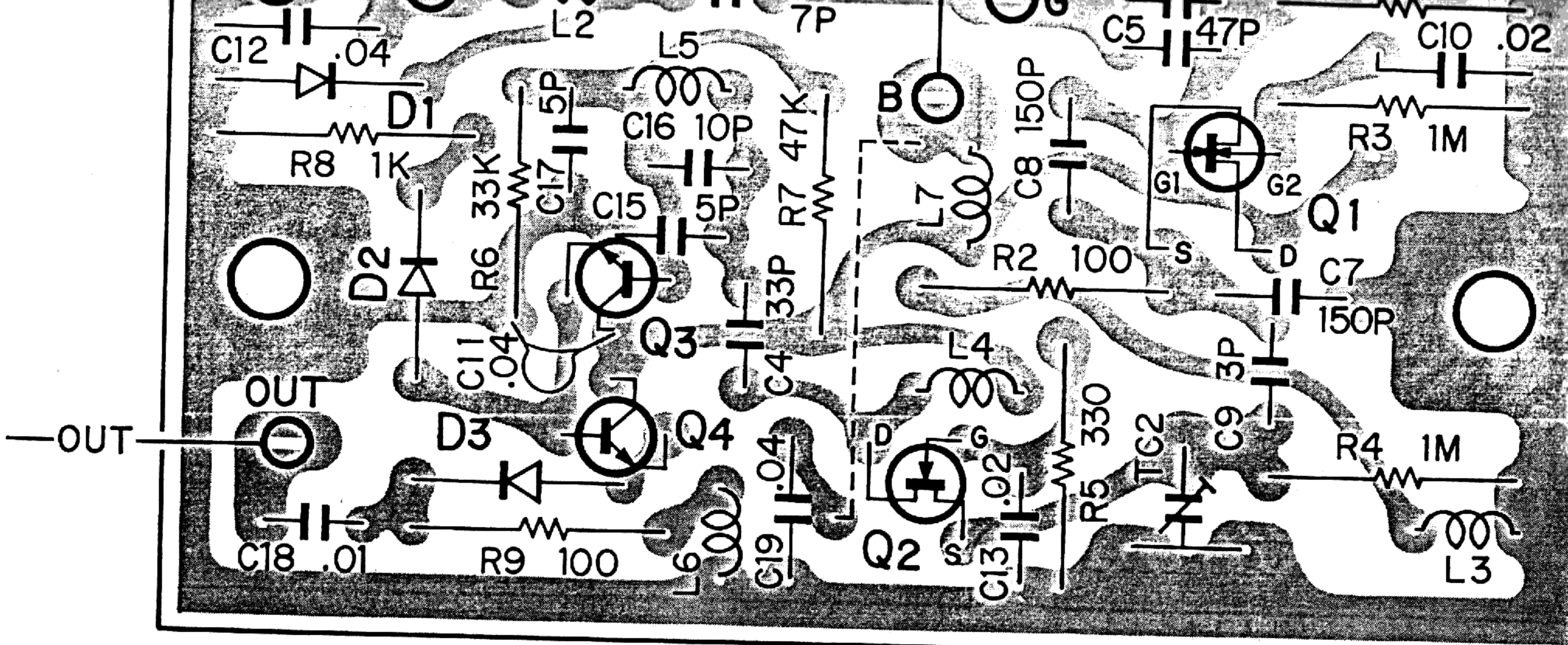


Q1: 3SK22(Y), Q2: 2SK19(Y), Q3,4: 2SC460(B), D1: SD111, D2,3: 1N60

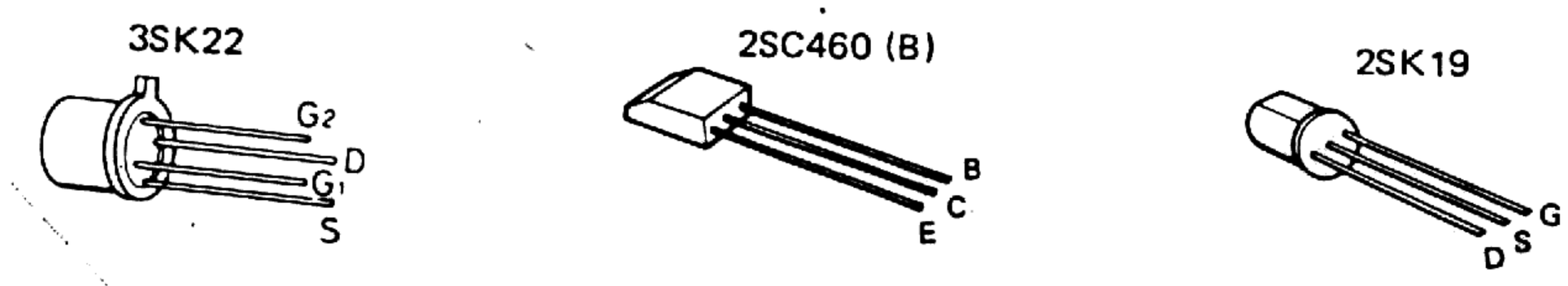

# CIRCUIT DIAGRAM / PC BOARD

▼ VFO (X40-1110-00)

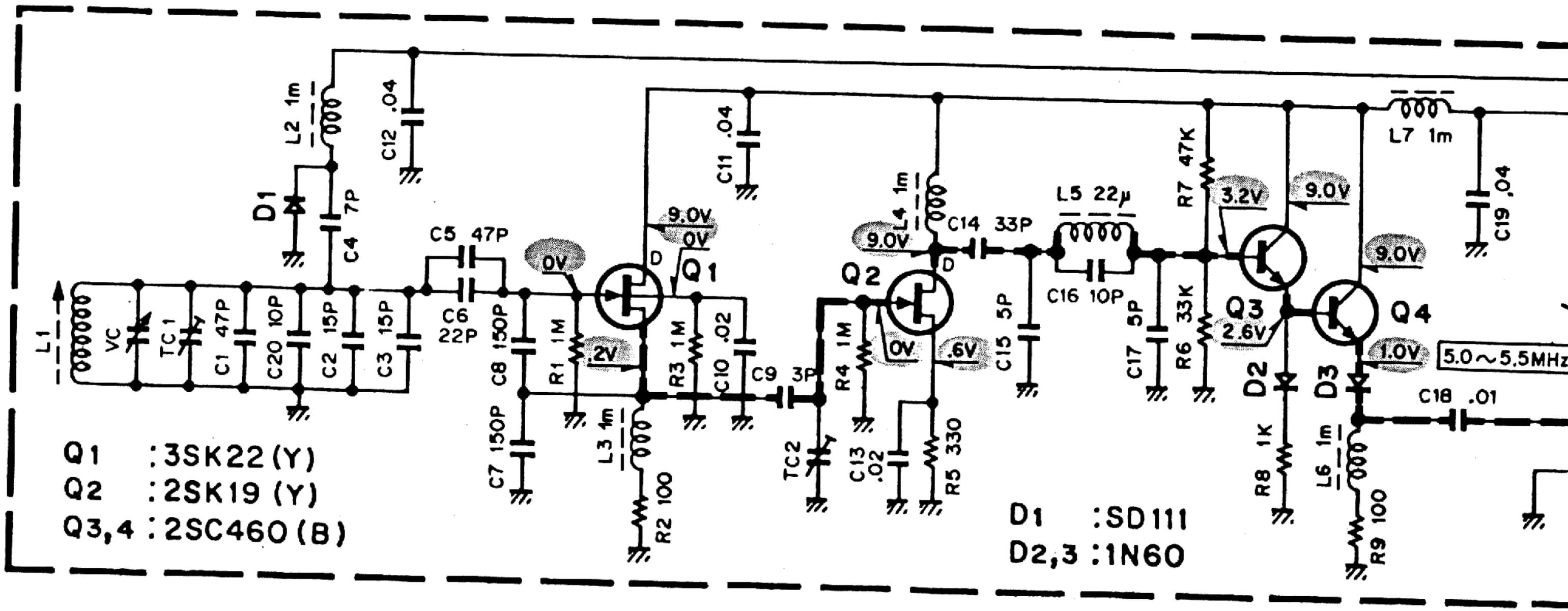


▼ VFO (X40-1110-00)

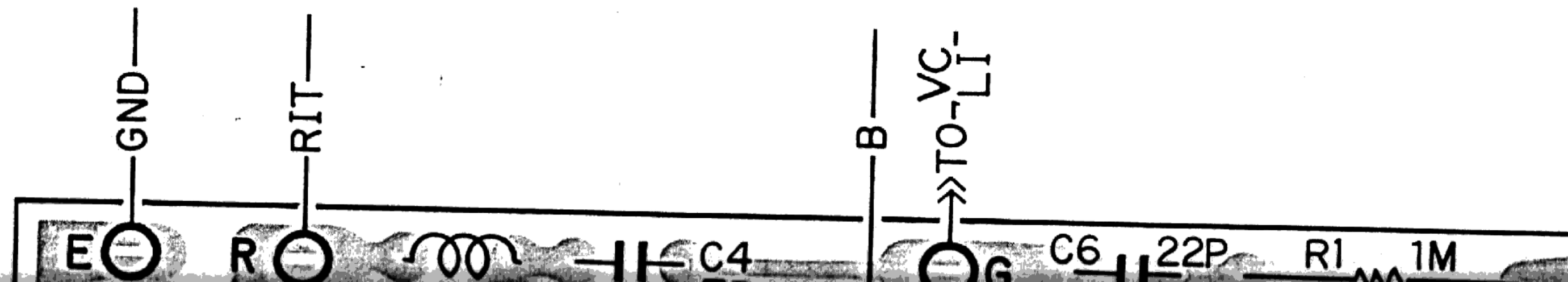

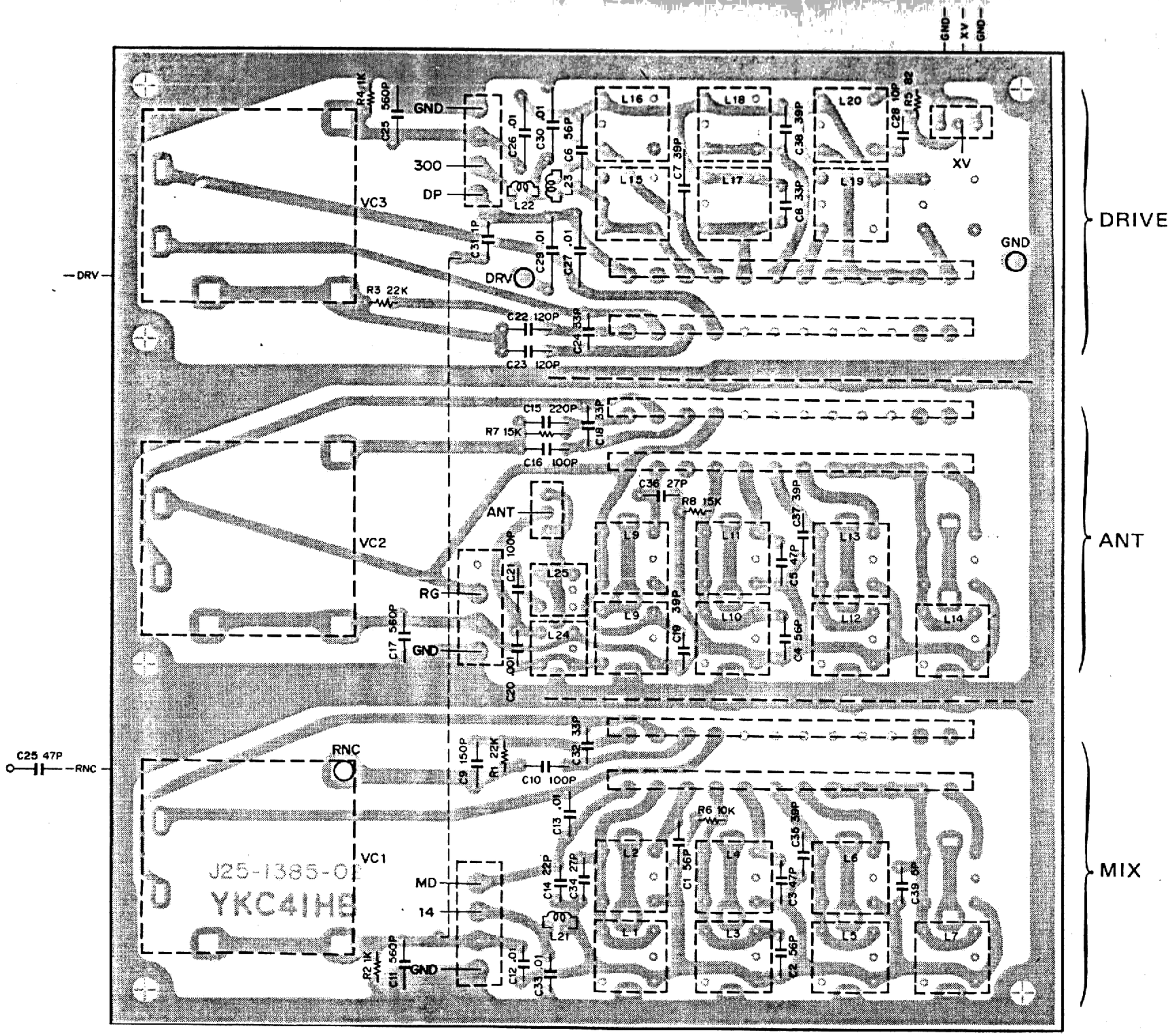
DRIVE
ANT
MIX
GND
XV
GND
XV
GND
300
DP
VC3
DRV
DRV
R3 22K
C22 120P
C23 120P
C24 33P
C15 220P
R7 15K
C16 100P
C18 33P
ANT
VC2
RG
GND
C36 27P
R8 15K
C37 39P
C5 47P
C4 56P
C19 39P
C20 .001
C21 100P
C17 560P
C25 47P
RNC
RNC
C9 150P
R1 22K
C10 100P
C32 33P
C13 .01
R6 10K
C35 39P
C1 56P
C3 47P
C2 56P
C39 .5P
C14 22P
C34 27P
VC1
J25-1385-01
YKC41H5
MD
14
GND
R2 1K
C11 560P
C12 .01
C33 .01
L16
L18
L20
L15
L17
L19
L22
L23
L25
L24
L9
L11
L13
L10
L12
L14
L2
L4
L6
L1
L3
L5
L7
L21

# CIRCUIT DIAGRAM / PC BOARD

## ▼ COIL PACK (X44-1140-00)

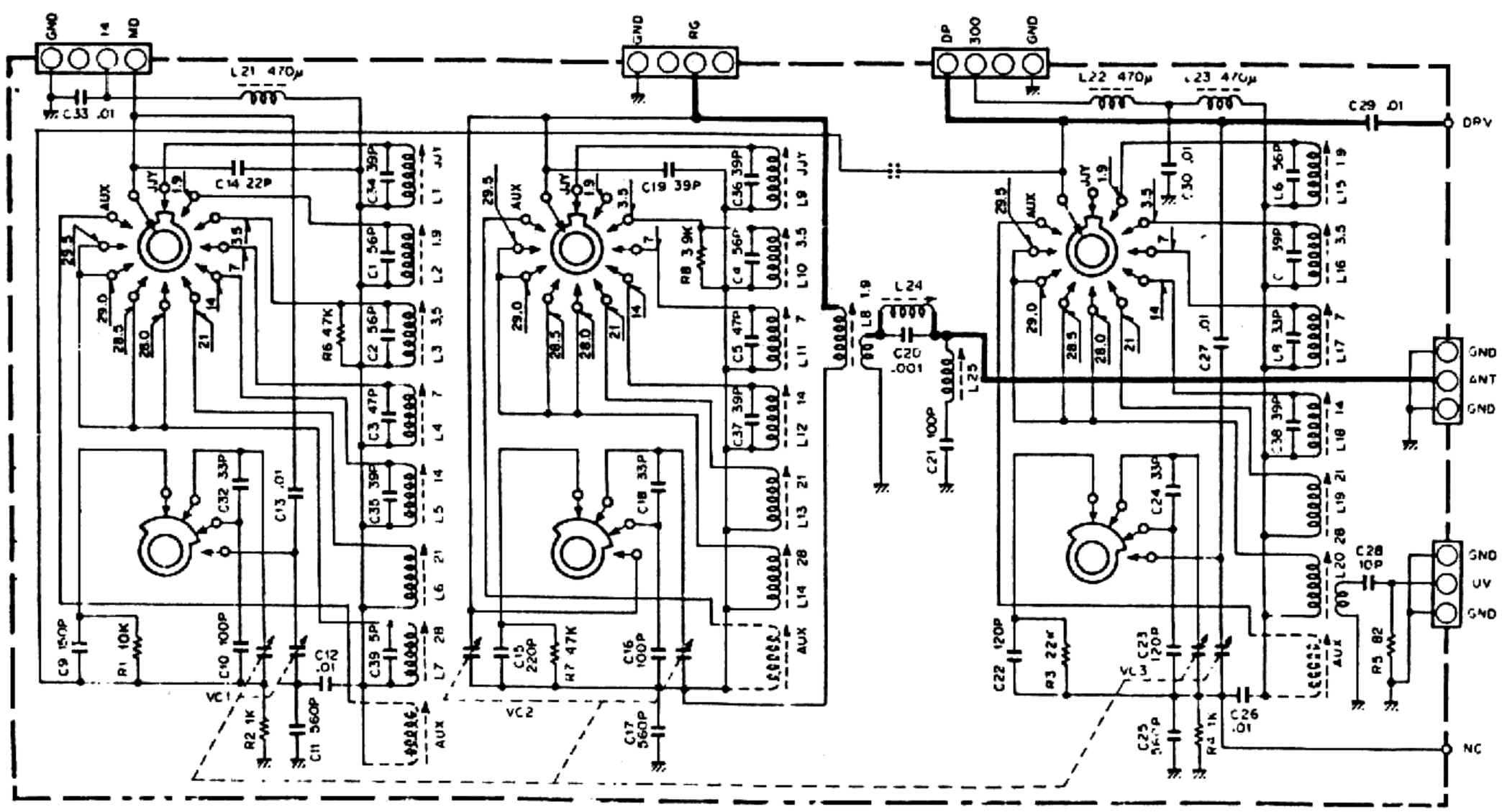


## ▼ COIL PACK (X44-1140-00)

## ▼ VCO (X50-1330-00)

Q1~6 :2SK19 (GR)
Q7~11 :2SK19 (BL)
Q12 :3SK41 (L)
Q13 :2SC460 (B)
Q15 :2SC734 (Y)

Q14 :2SC741
D1~12 :1S2588
D13~23 :1S1658-(3)

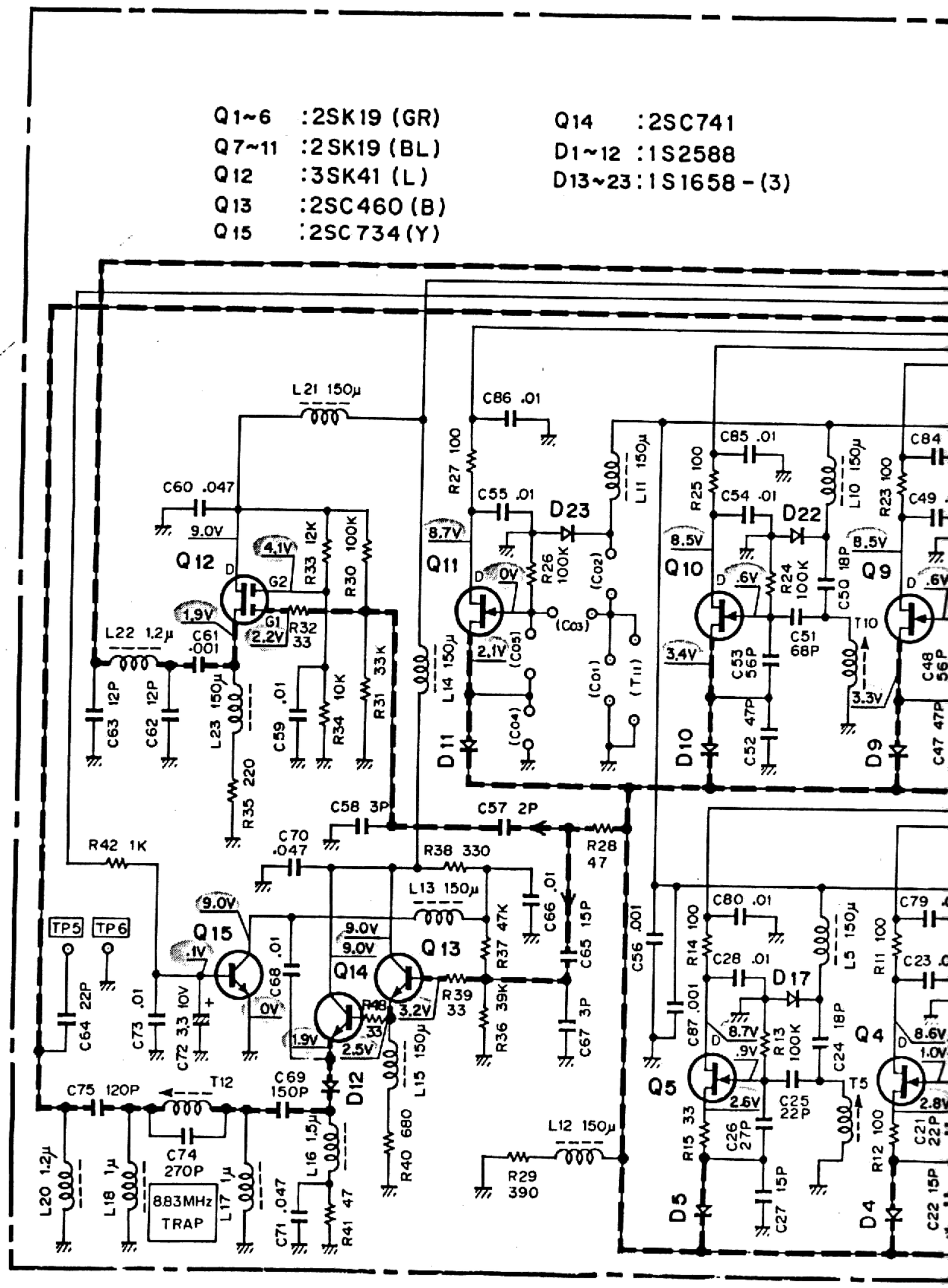


2SC460 (B)

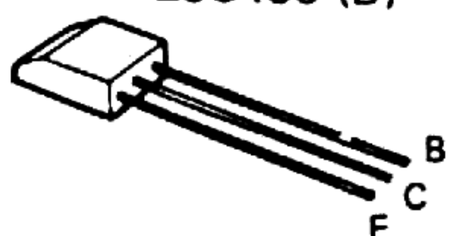


3SK41

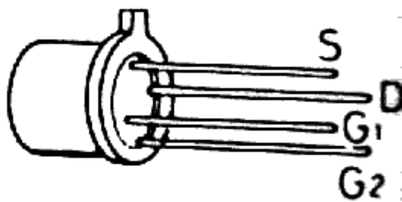

# CIRCUIT DIAGRAM / PC BOARD

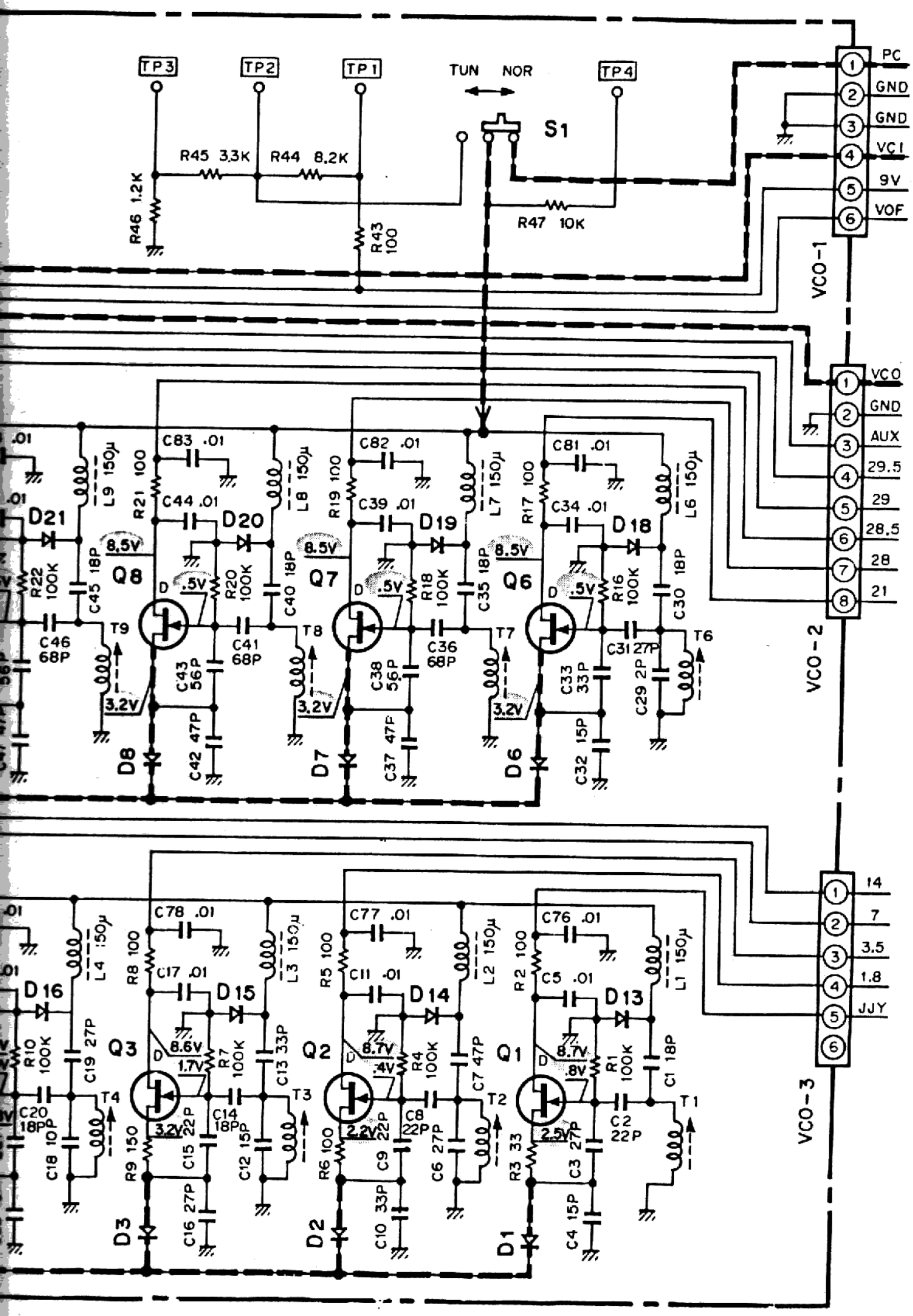


2SK19

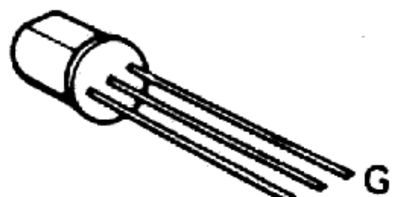


2SC741

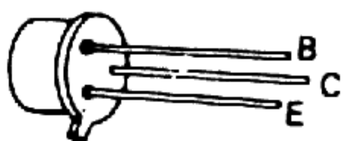

## ▼ VCO (X50-1330-00)

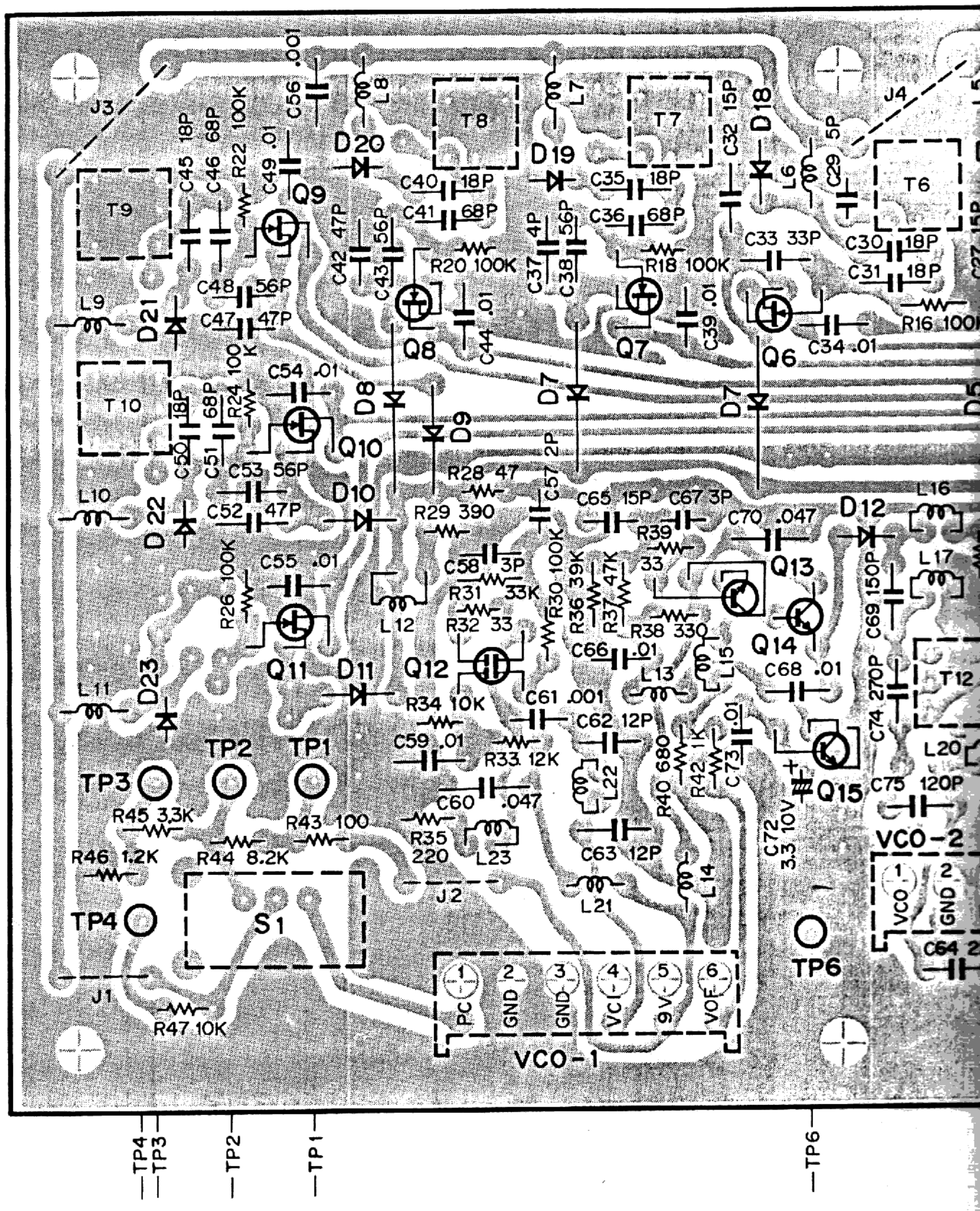


Q1～11: 2SK19(BL), Q12: 3SK41(L), Q13,15: 2SC460(B), Q14: 2SC741, D1～12: 1

# CIRCUIT DIAGRAM / PC BOARD

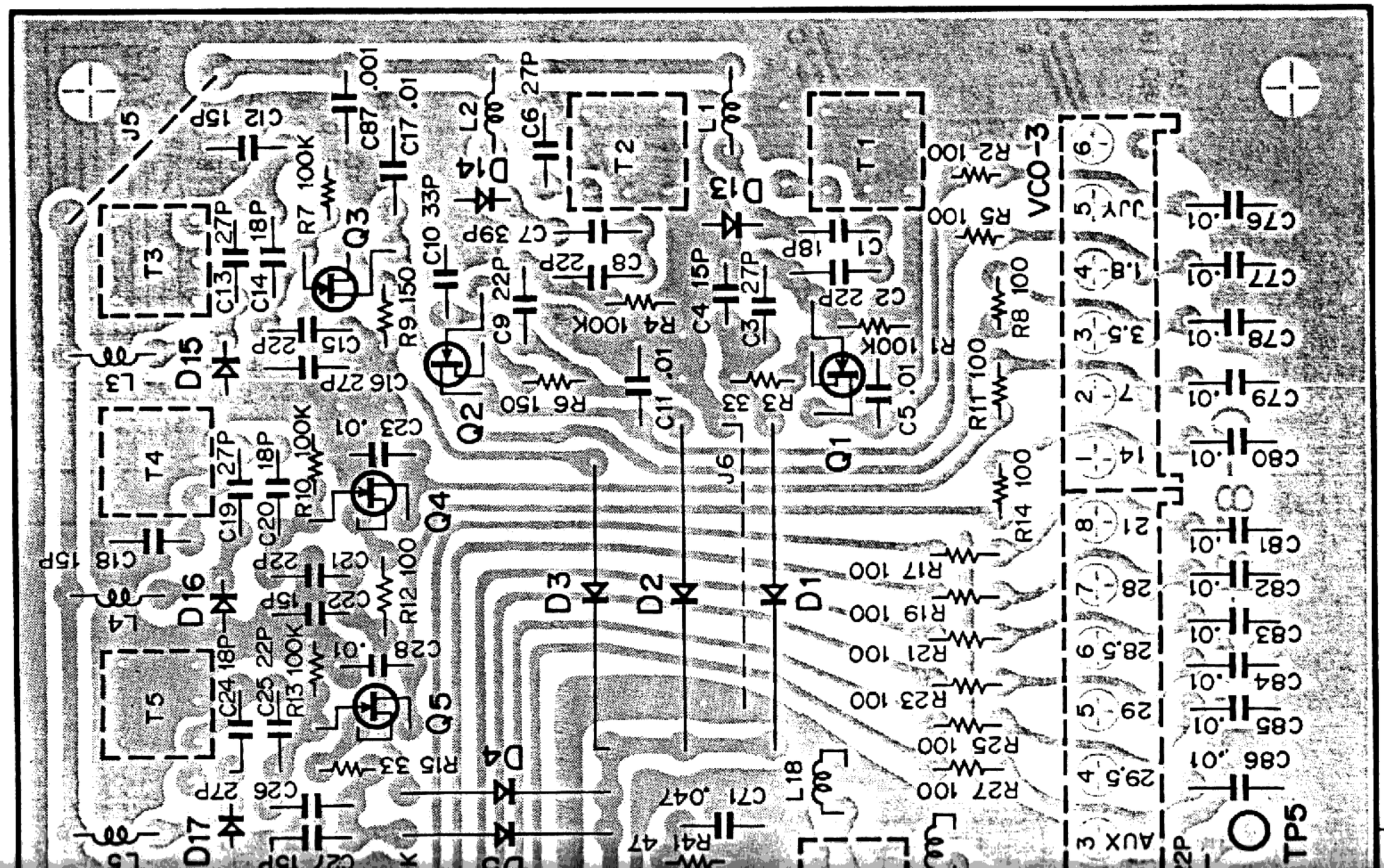


S2588. D13～23: 1S1658-2

## ▼ PD (X50-1340-00)

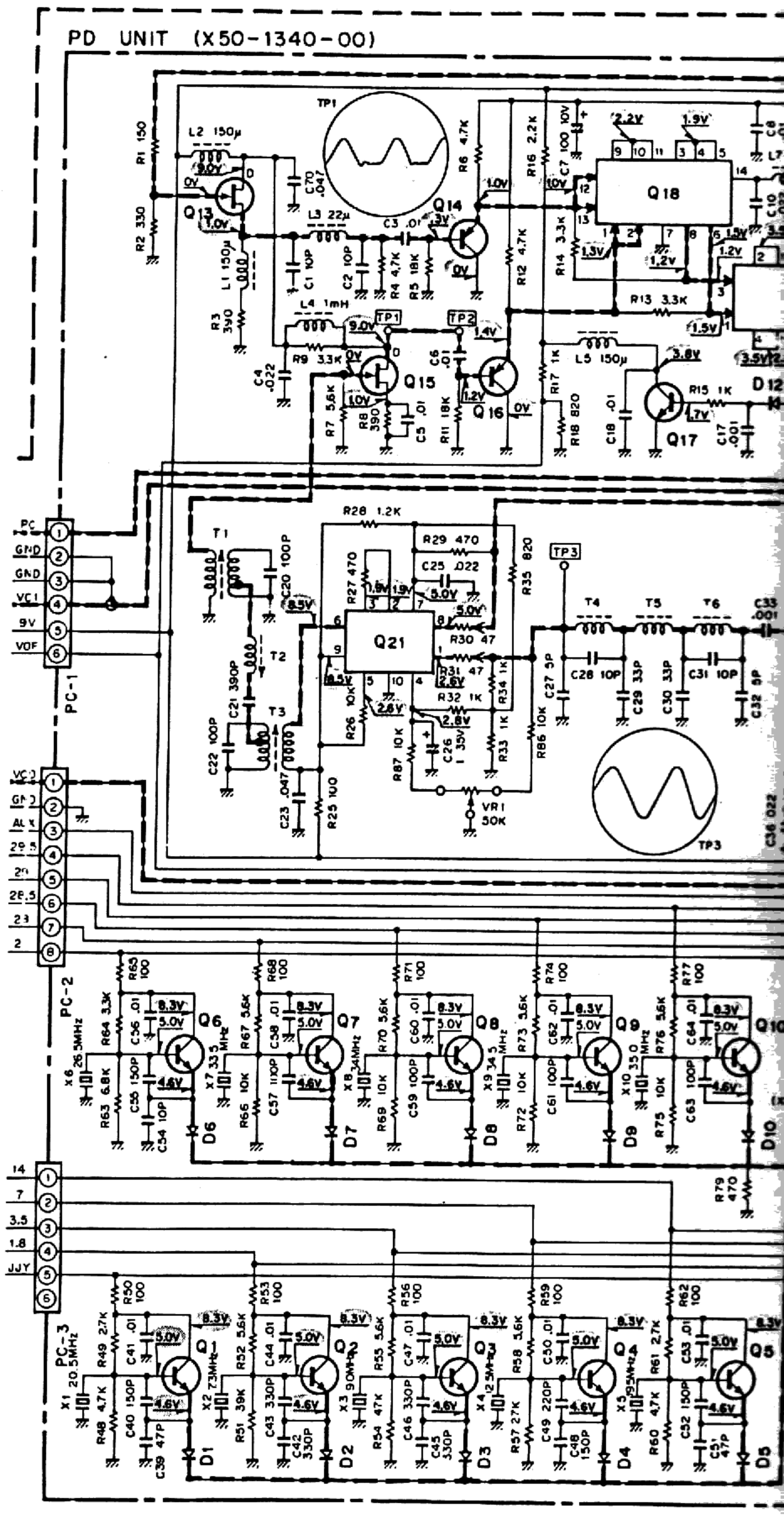

# CIRCUIT DIAGRAM / PC BOARD

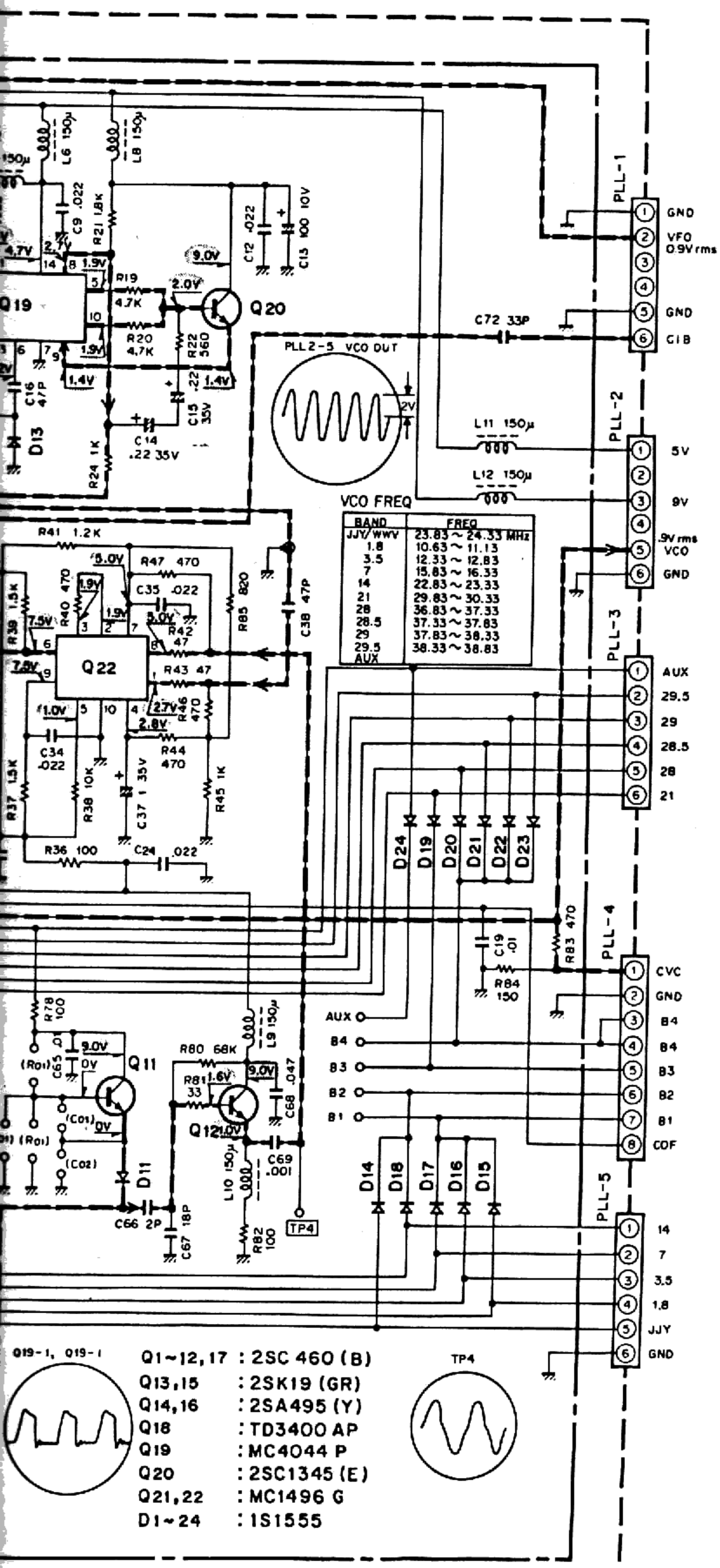


TD3400AP
MC4044P

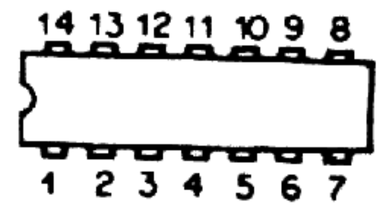


TOP VIEW

2SC1345
2SC460 (B)

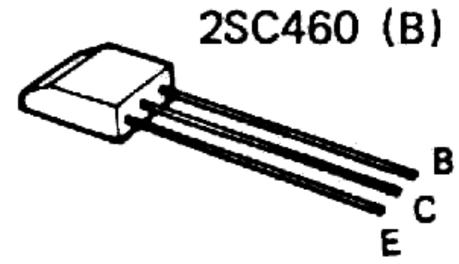


2SA495

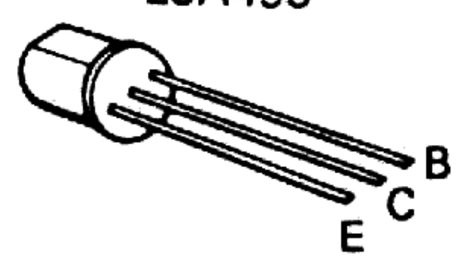


2SK19

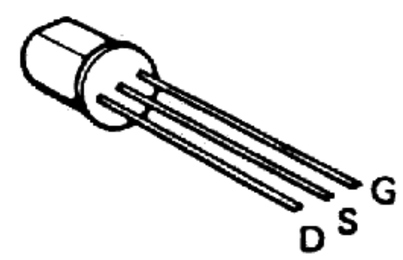


Bottom View

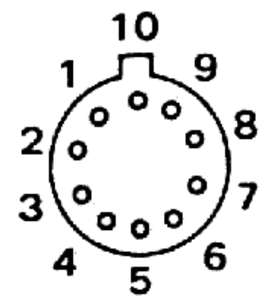


MC1496G

## ▼ PD (X50-1340-00)

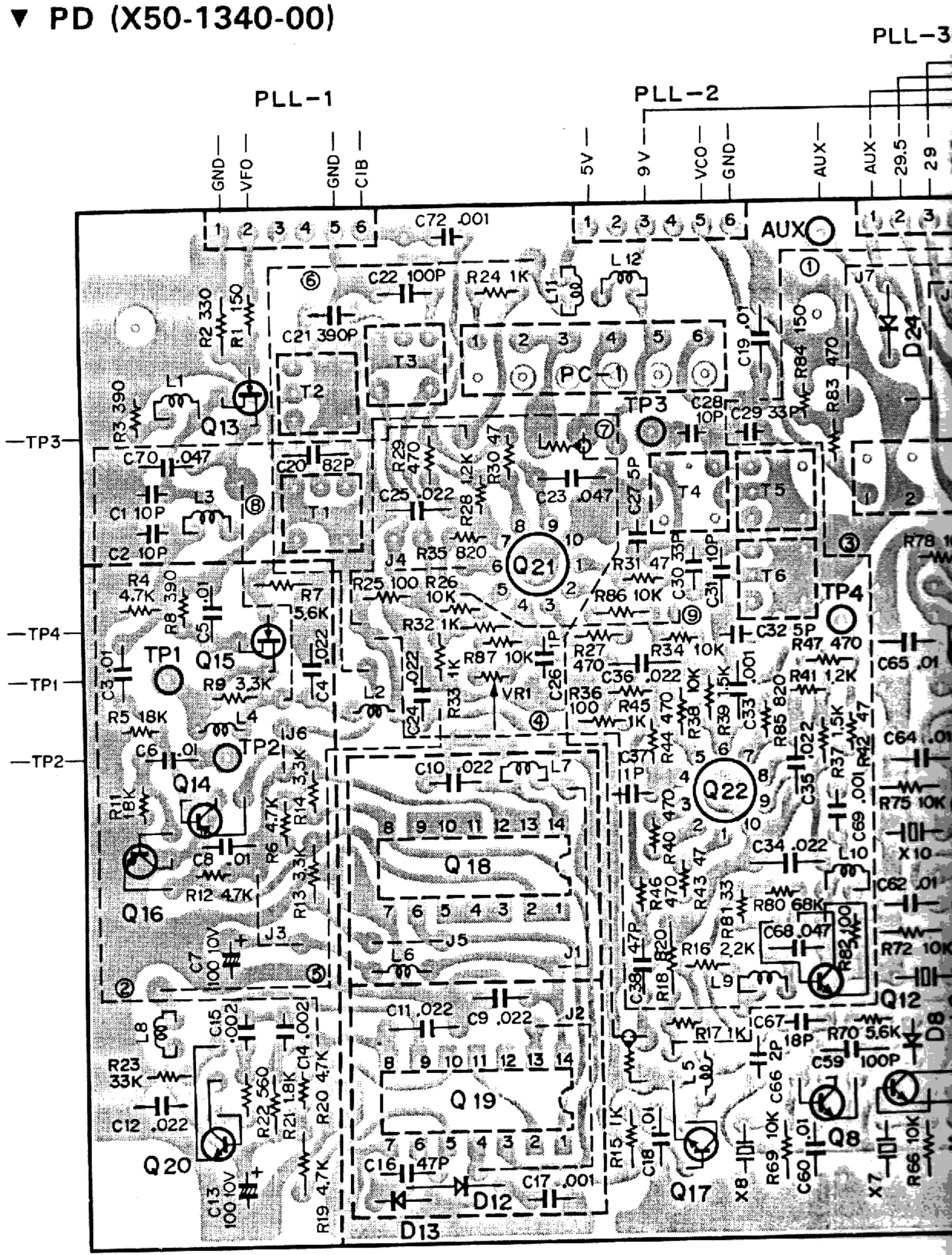


Q1～12,17: 2SC460(B). Q13,15: 2SK19(GR), Q14,16: 2SA495(Y), 2SC1345(E), Q21,22: MC1496G, D1～24: 1S1555

# CIRCUIT DIAGRAM / PC BOARD

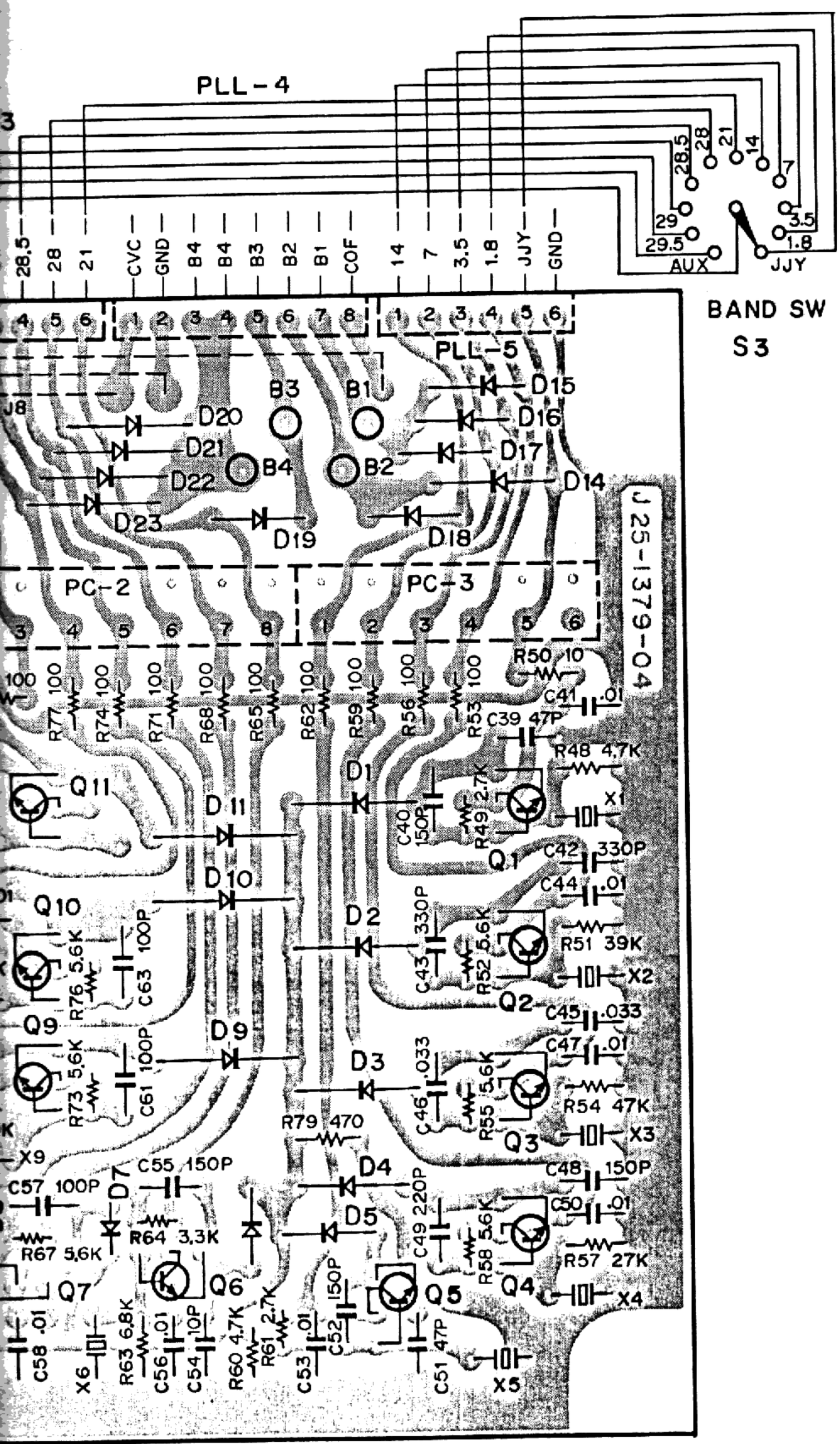


Q18: TD3400AP, Q19: MC4044P, Q26:

# CIRCUIT DIAGRAM / PC BOARD

▼ FINAL (X56-1200-00)

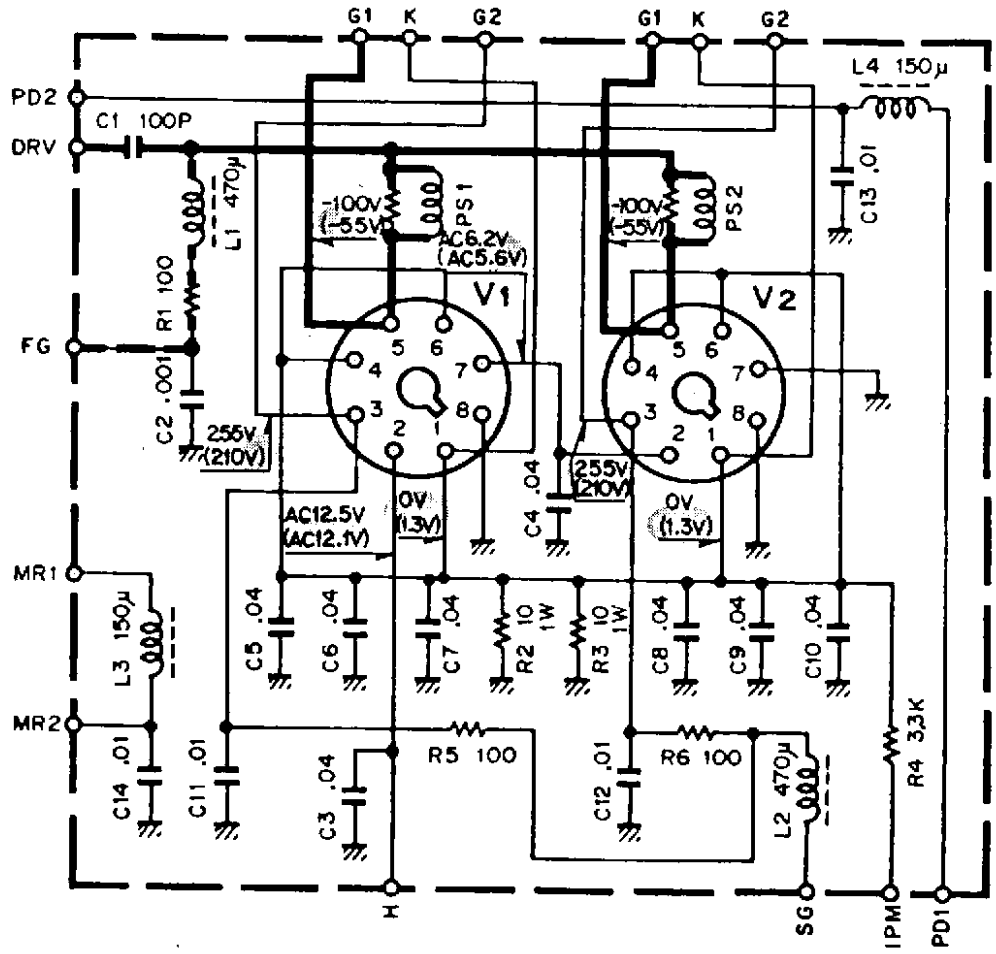


▼ FINAL (X56-1200-00)

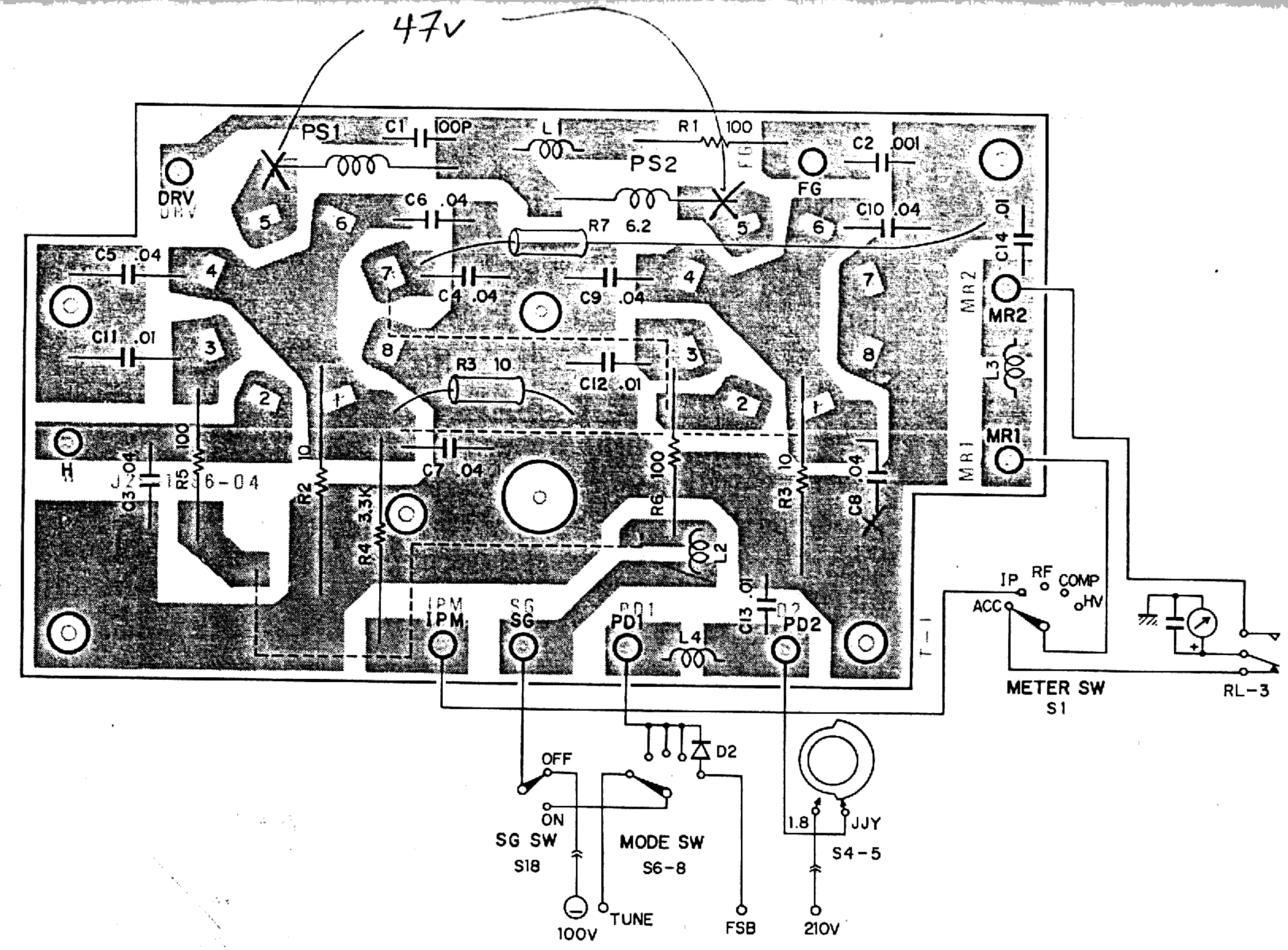
47v
PS1
C1 100P
L1
R1 100
PS2
C2 .001
DRV
FG
C6 .04
R7 6.2
C10 .04
C14 .01
C5 .04
C4 .04
C9 .04
MR2
C11 .01
R3 10
C12 .01
L3
MR1
H
C7 .04
R5 100
R2 10
R4 3.3K
R6 100
R3 10
C8 .04
C3 .04
L2
IPM
SG
PD1
L4
C13 .01
PD2
IP
RF
COMP
HV
ACC
METER SW
S1
RL-3
OFF
D2
ON
SG SW
S18
MODE SW
S6-8
1.8
JJY
S4-5
TUNE
100V
FSB
210V

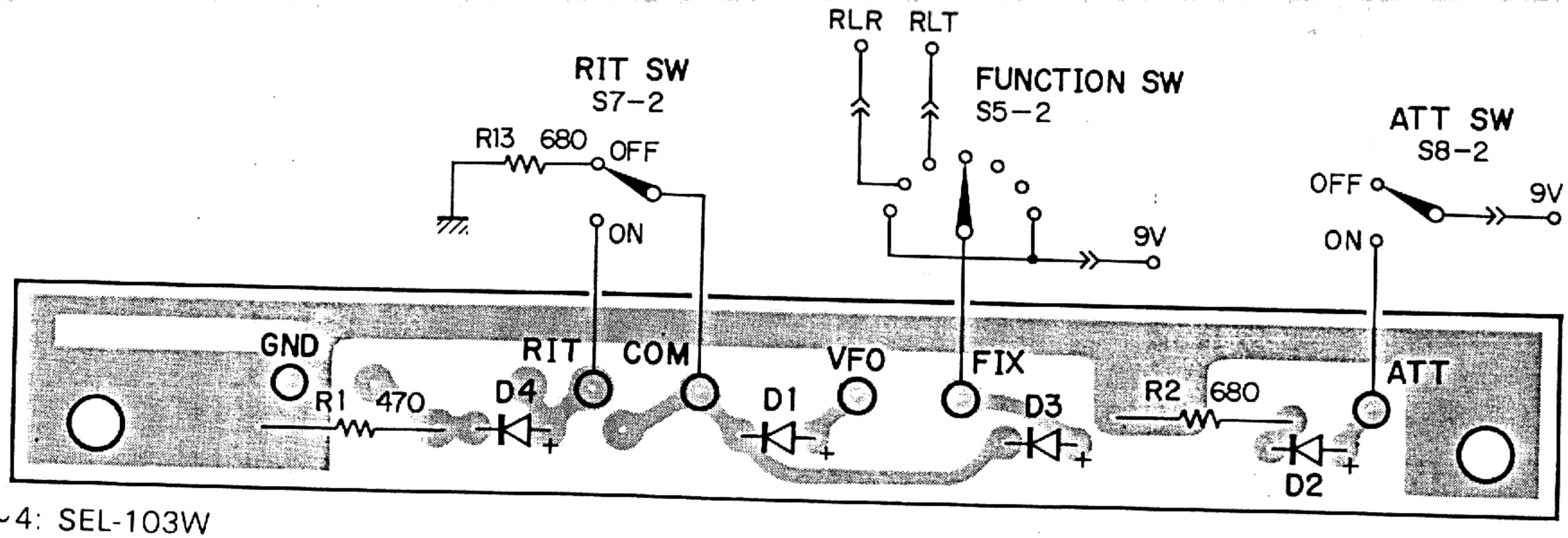


~4: SEL-103W

## MARKER (X52-0005-01)

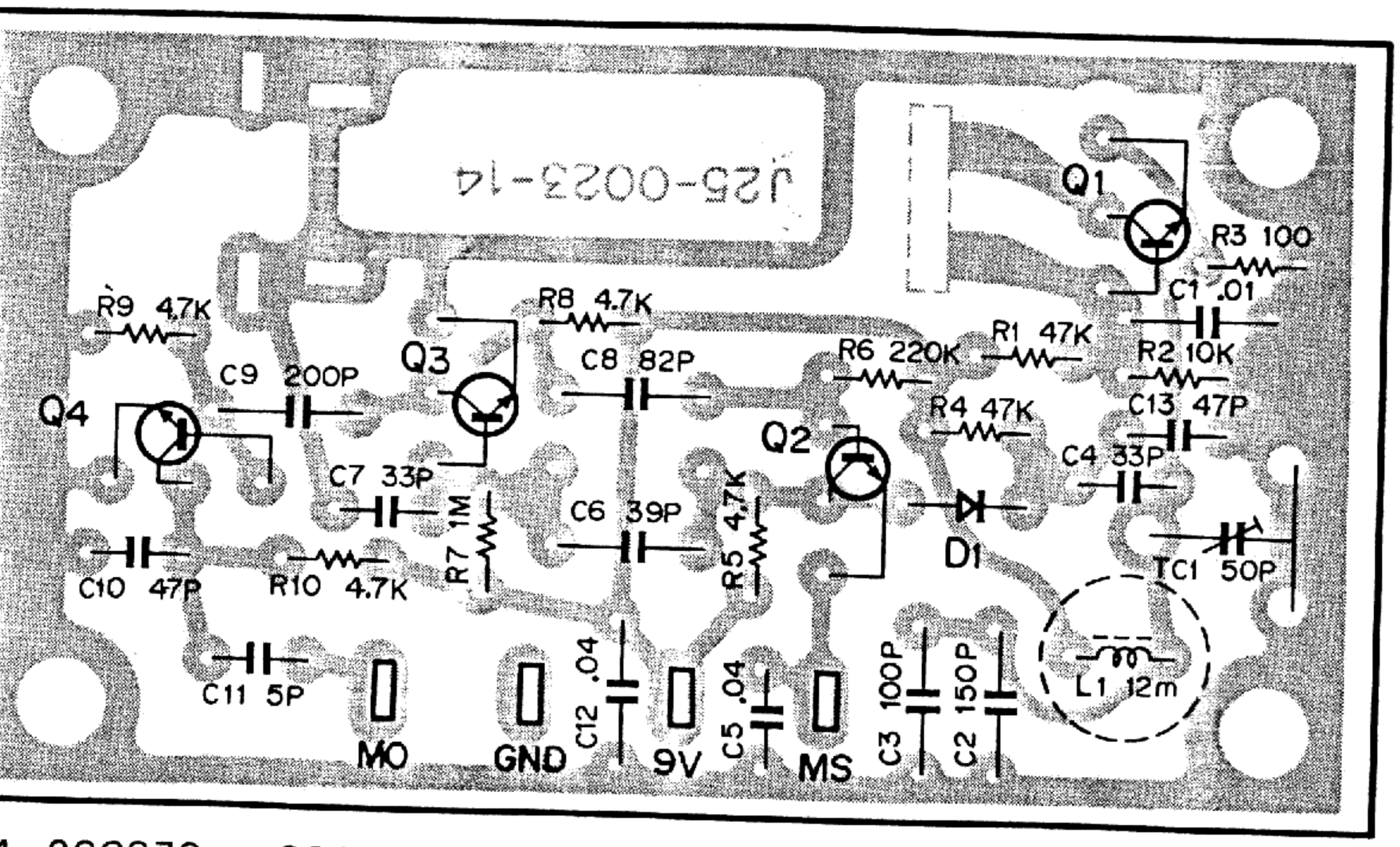


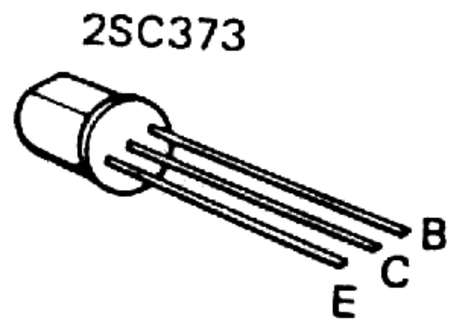


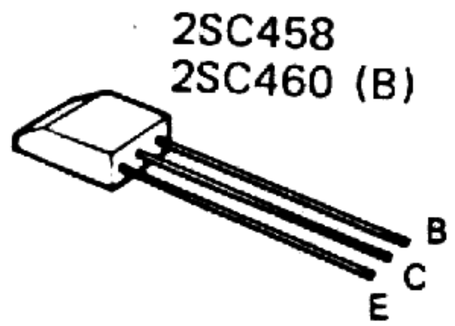


4: 2SC373 or 2SC458(B). Q2,3: 2SC373, D1: 1N60

# PC BOARD

## RECTIFIER (X43-1090-02)

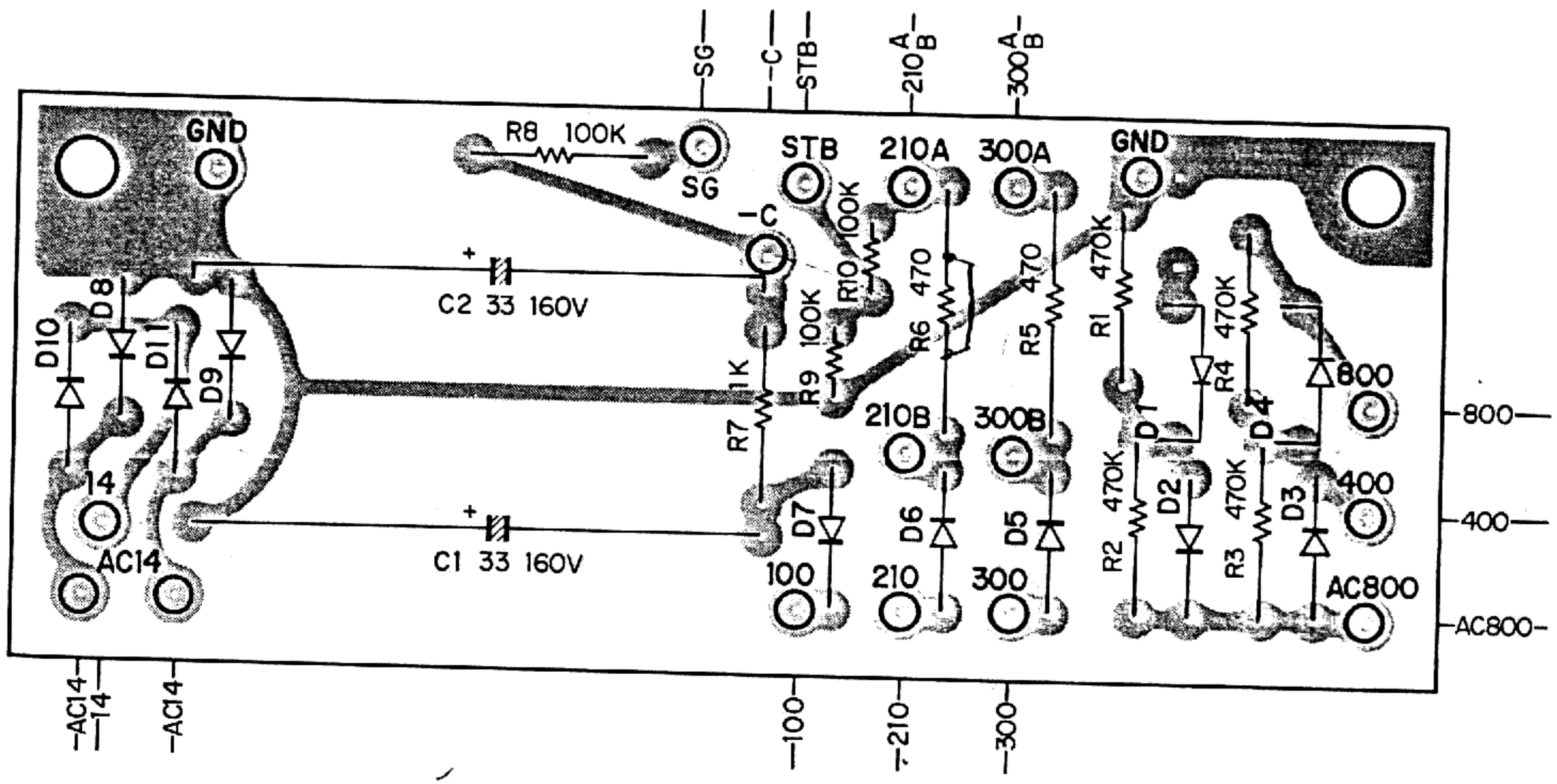


1～6: V08J, D7: V06E, D8～11: V03C

## INDICATER (X54-1180-00)

▼ HV (X43-1110-00)

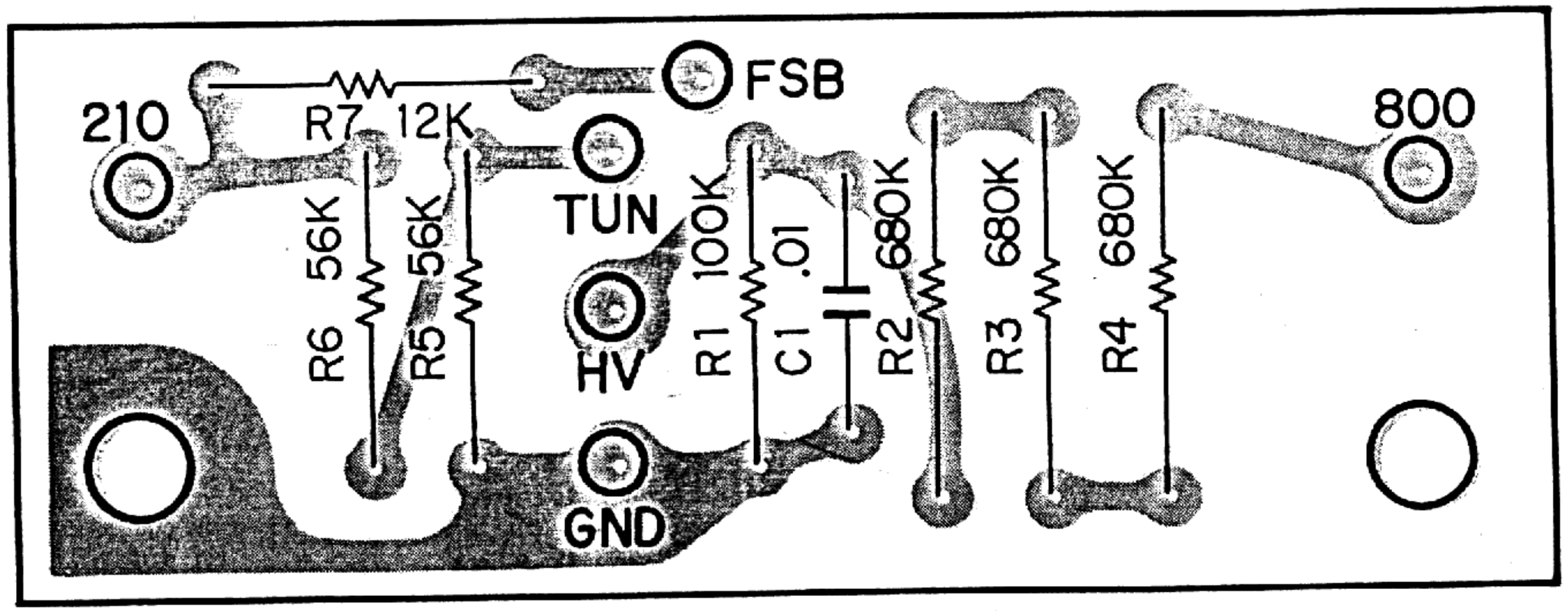

# PC BOARD

## ▼ RELAY (X43-1190-00)

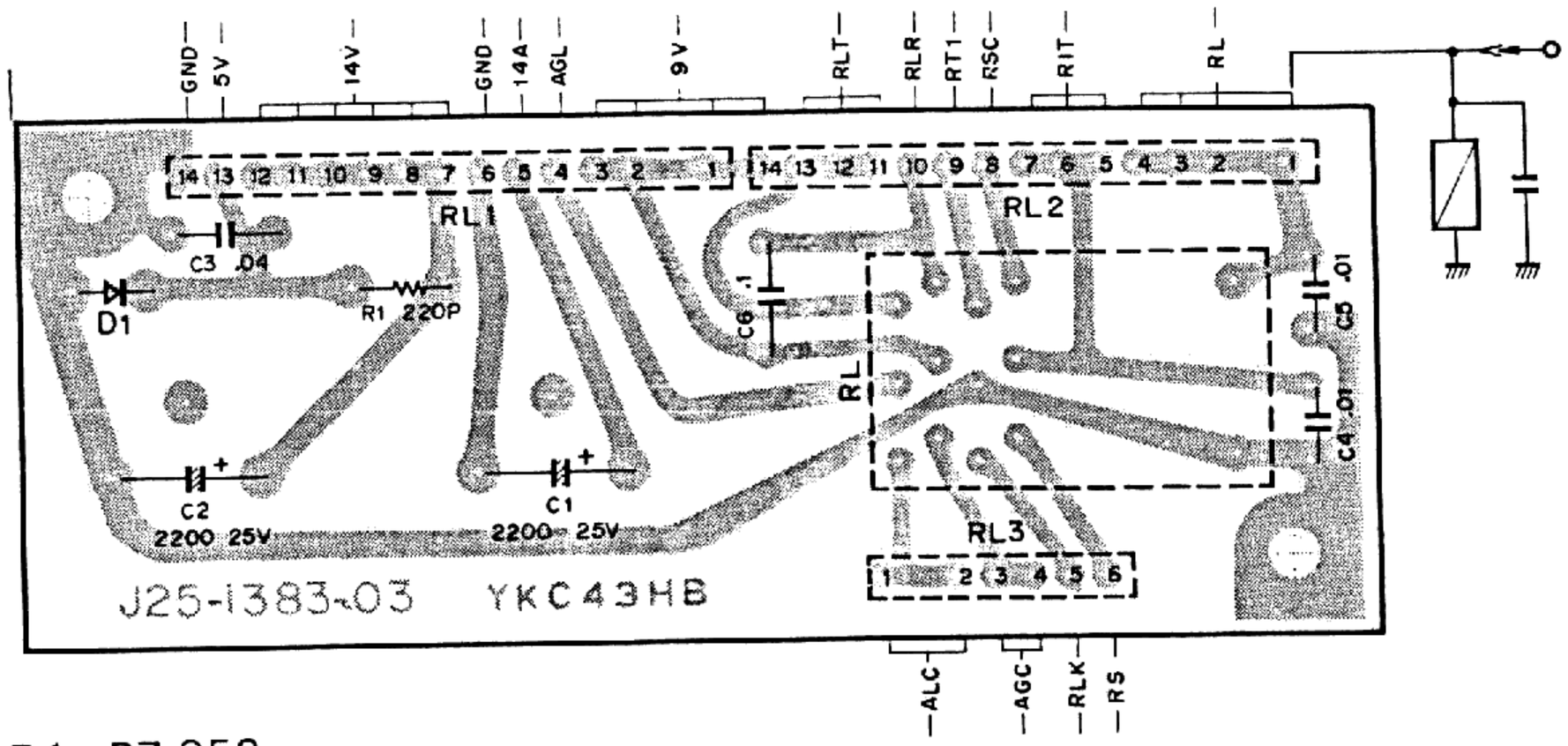


D1: BZ-052

## ▼ VOX-VR (X54-1190-00)

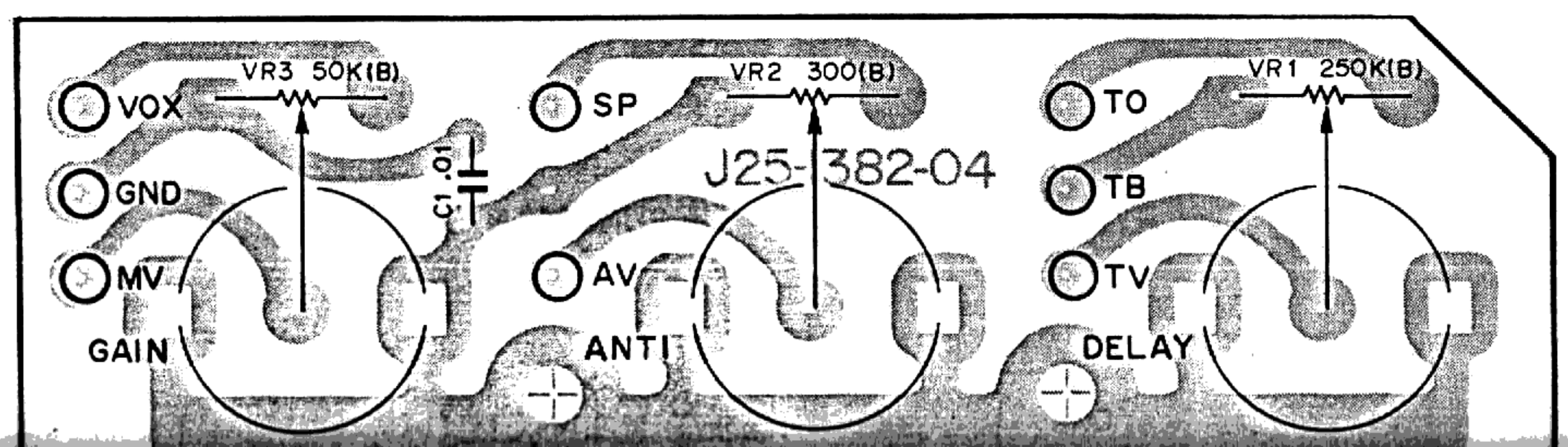

# SCHEMATIC D

——— SIGNAL - - - - - - CONTROL SIGNAL, ——— COMMON POWER SOURC

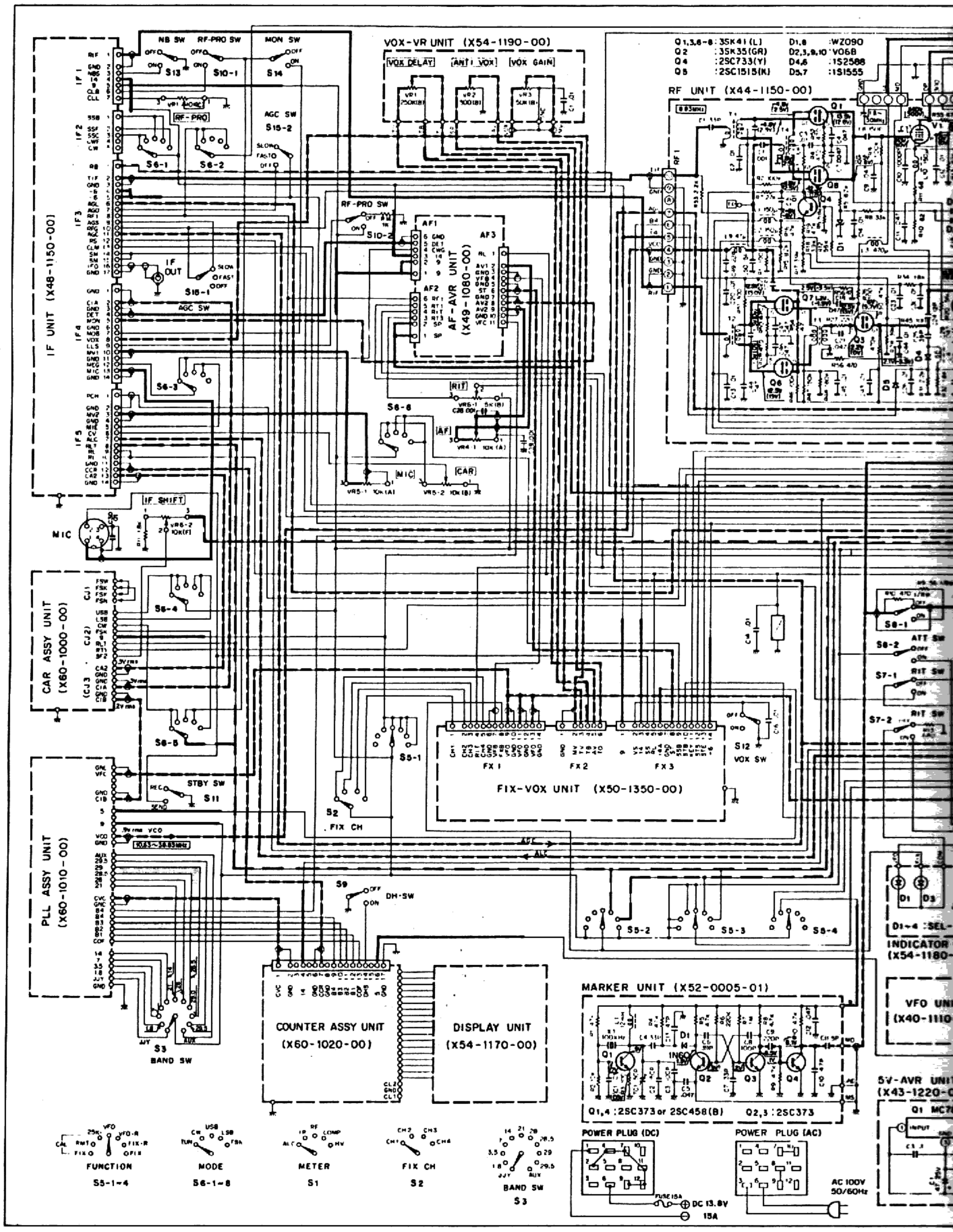

# DIAGRAM

E, ---------- TB,RB,CONTROL POWER SOURCE, ● VOLTAG, (TRANSMISSION)

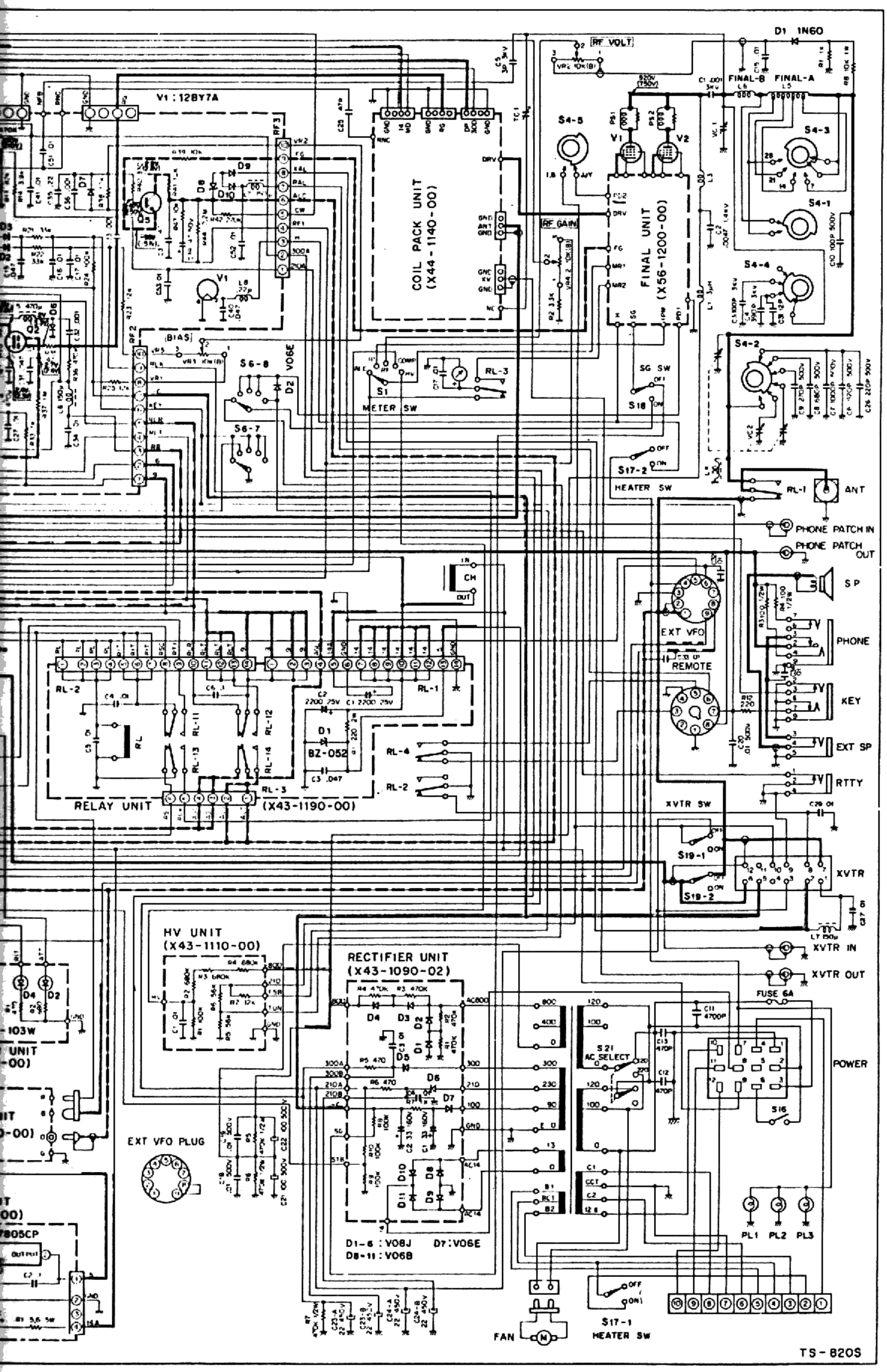


**DG-1 (option) Installed.**

# CONNECT

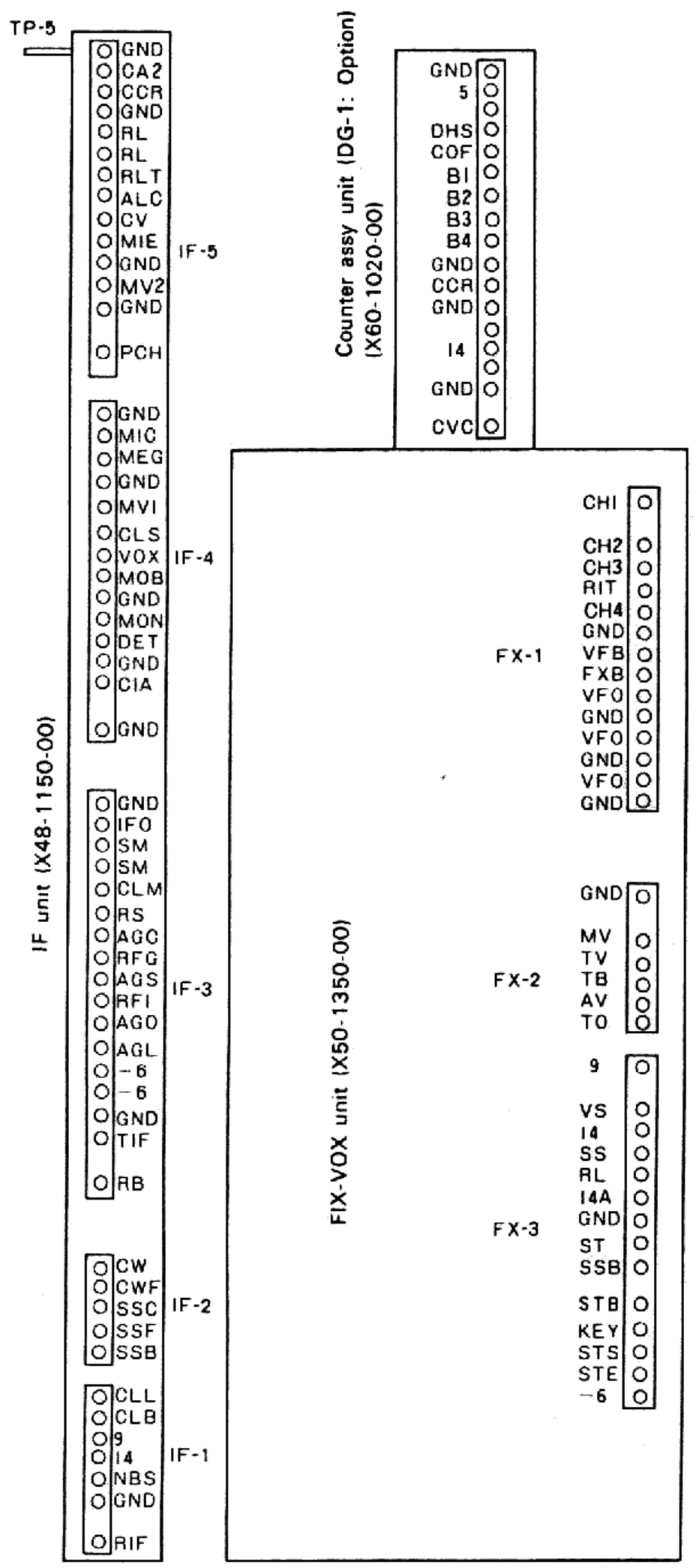
TP-5
IF unit (X48-1150-00)
IF-5
GND
CA2
CCR
GND
RL
RL
RLT
ALC
CV
MIE
GND
MV2
GND
PCH
IF-4
GND
MIC
MEG
GND
MVI
CLS
VOX
MOB
GND
MON
DET
GND
CIA
GND
IF-3
GND
IFO
SM
SM
CLM
RS
AGC
RFG
AGS
RFI
AGD
AGL
-6
-6
GND
TIF
RB
IF-2
CW
CWF
SSC
SSF
SSB
IF-1
CLL
CLB
9
14
NBS
GND
RIF
Counter assy unit (DG-1: Option)
(X60-1020-00)
GND
5
DHS
COF
B1
B2
B3
B4
GND
CCR
GND
14
GND
CVC
FIX-VOX unit (X50-1350-00)
FX-1
CH1
CH2
CH3
RIT
CH4
GND
VFB
FXB
VFO
GND
VFO
GND
VFO
GND
FX-2
GND
MV
TV
TB
AV
TO
FX-3
9
VS
14
SS
RL
14A
GND
ST
SSB
STB
KEY
STS
STE
-6

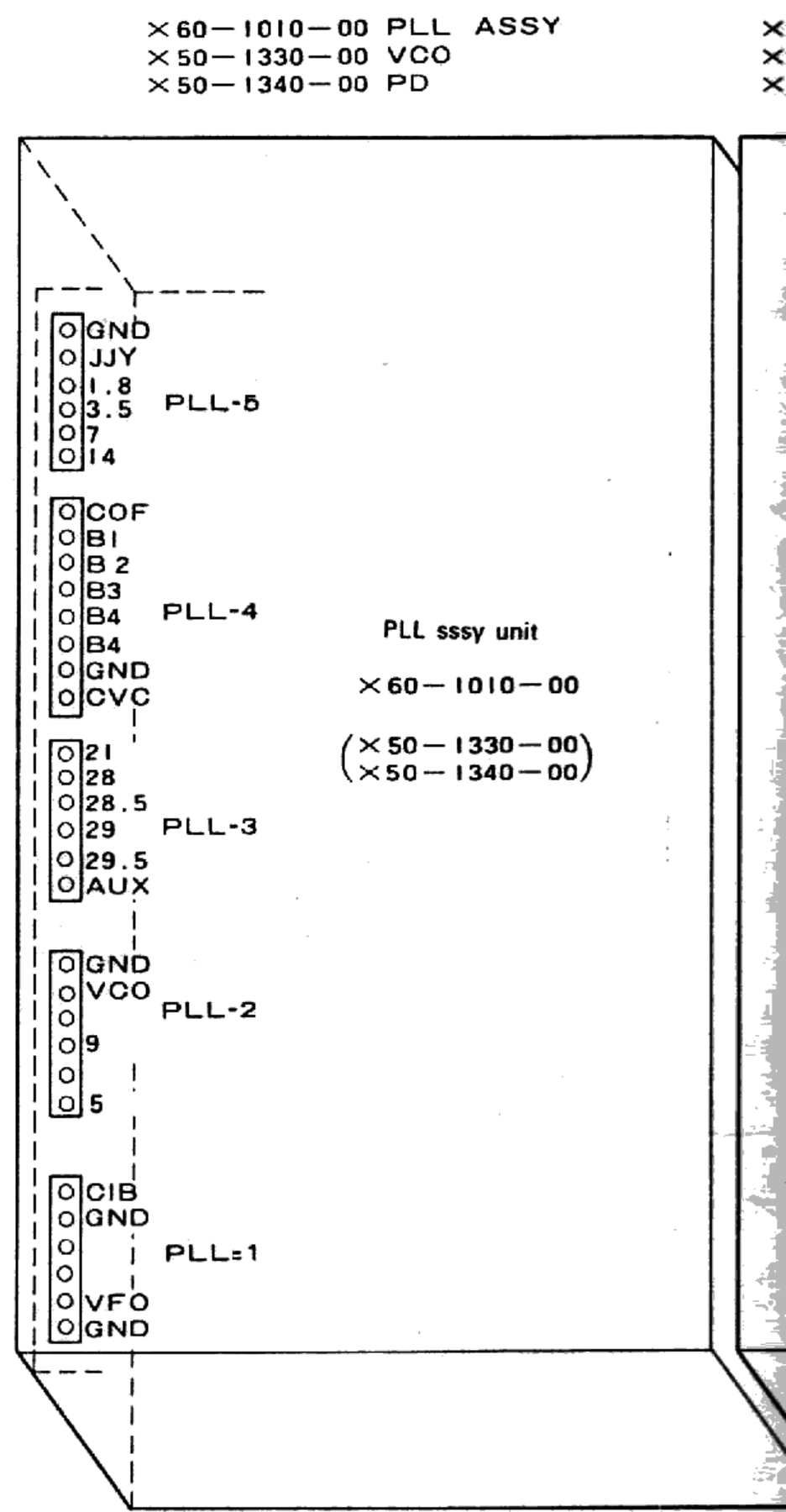
×60—1010—00 PLL ASSY
×50—1330—00 VCO
×50—1340—00 PD
PLL-5
GND
JJY
1.8
3.5
7
14
PLL-4
COF
B1
B2
B3
B4
B4
GND
CVC
PLL-3
21
28
28.5
29
29.5
AUX
PLL-2
GND
VCO
9
5
PLL=1
CIB
GND
VFO
GND
PLL sssy unit
×60—1010—00
(×50—1330—00
×50—1340—00)

# TOR TERMINALS

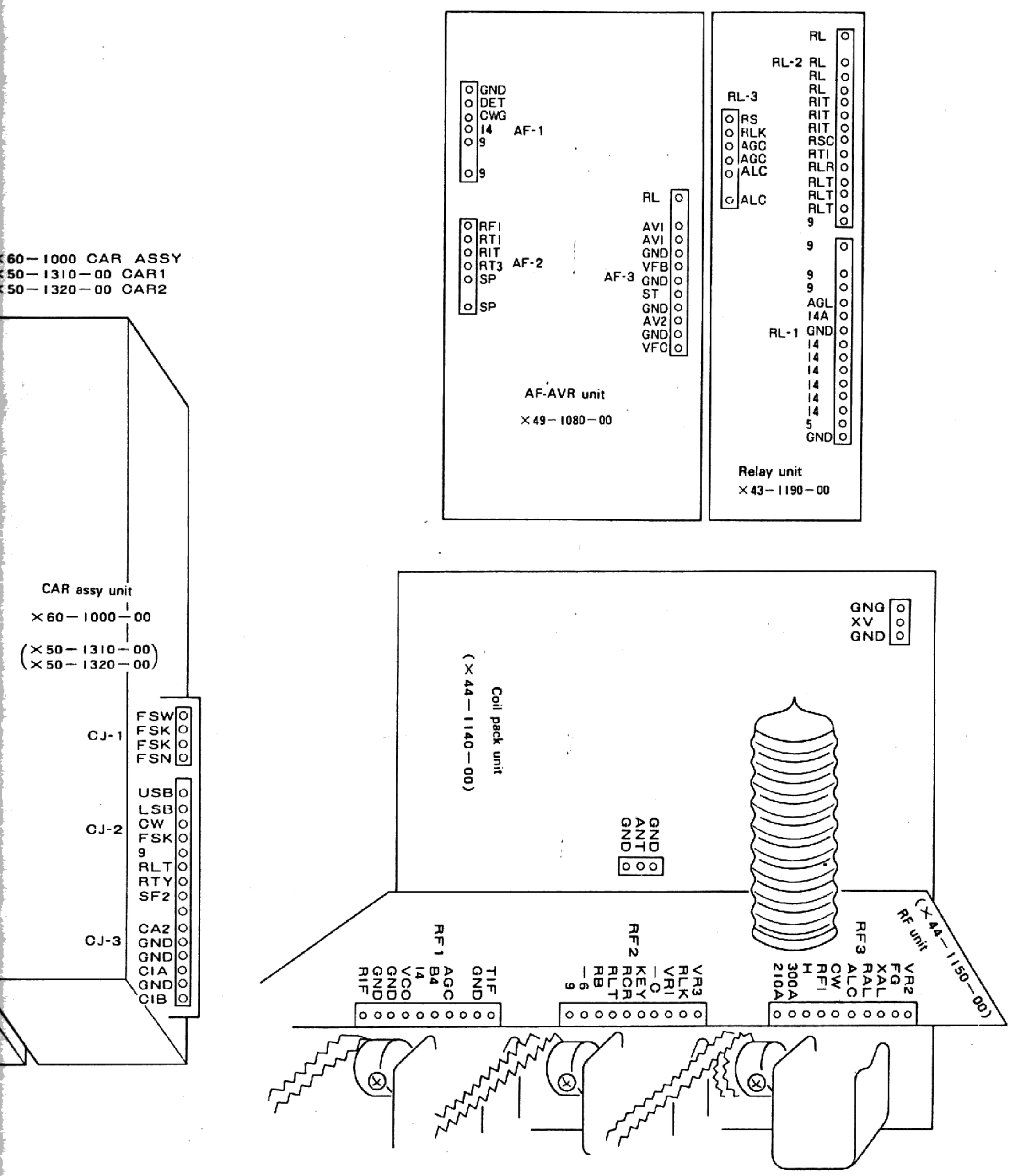

# VFO-820


## SPECIFICATIONS

**OSCILLATION FREQUENCY:**
5.0 to 5.5 MHz

**OSCILLATION CIRCUIT:**
VFO: Clapp Oscillator

**OUTPUT VOLTAGE:**
1 volt ± 3 dB (across a 470 ohm load).

**FREQUENCY STABILITY:**
Within ±100 Hz per 30 minutes after 3 minutes of warm-up.

**SOLID STATE COMPLEMENT:**
2 transistors
2 FET's
6 diodes

**POWER REQUIREMENTS:**
The VFO-820 receivers power from the TS-820.
12.6 VAC, 40 ma. 12.6 VDC, 40 ma. 9.0 VDC, 25 ma.

**DIMENSIONS:**
6.5" wide × 6.0" high × 7.5" deep (excluding feet).

**WEIGHT:**
6.6 lbs. (shipping weight 8.36 lbs.)

## BLOCK DIAGRAM

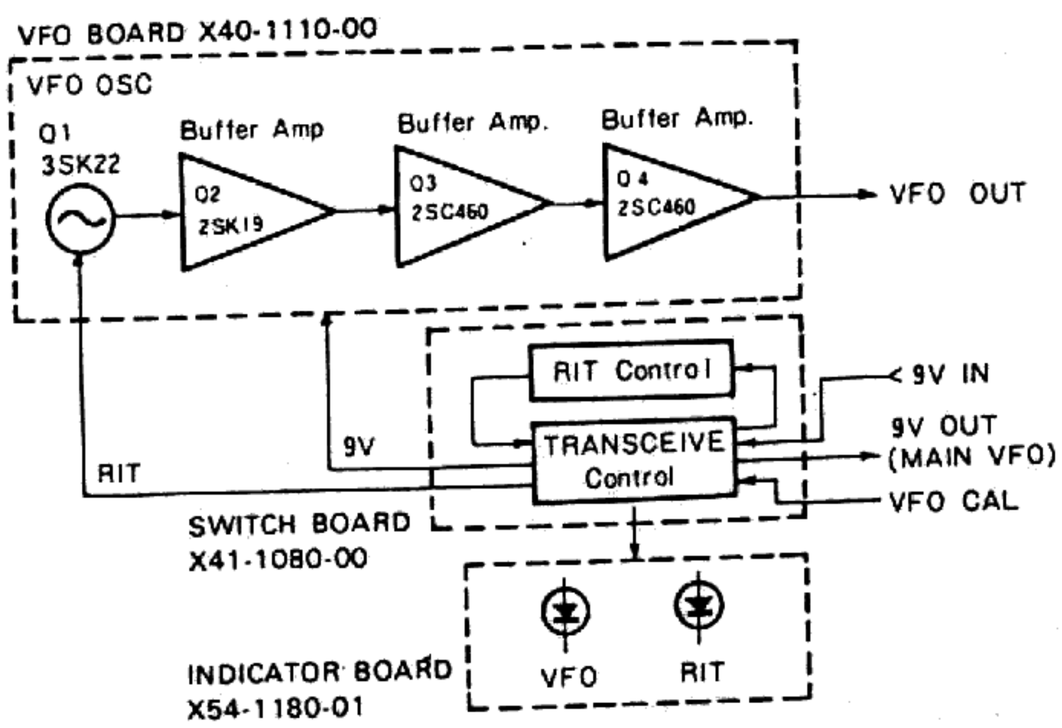


## CONNECTION WITH TS-820

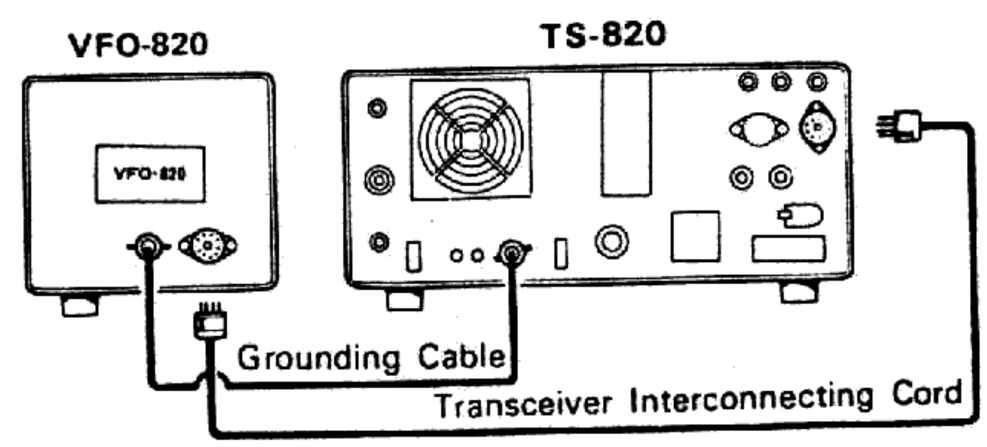


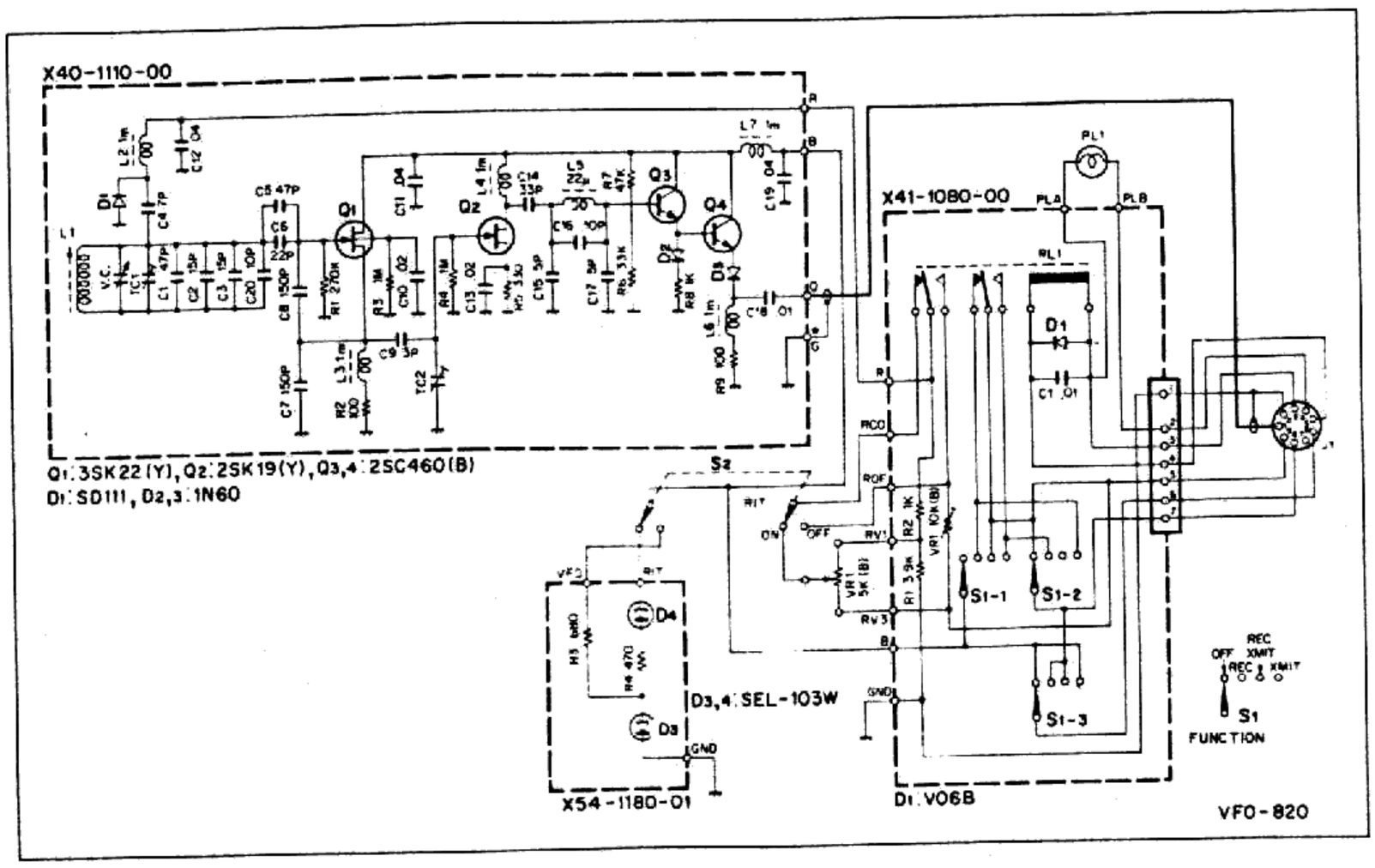

## VFO-820

With regard to VFO unit (X40-1110-00), refer to that of TS-820

| Ref. No. | Parts No. | Description | Remarks |
|---|---|---|---|
| | | **MISCELLANEOUS** | |
| S2 | S40-2077-05 | Push switch RIT | |
| | A01-0300-13 | Case | |
| | A20-1071-05 | Panel | |
| | A22-0200-02 | Sub-panel | |
| | A23-0430-03 | Rear panel | |
| | A40-0156-13 | Bottom plate | |
| | B01-0105-05 | Dial escucheon | |
| | B09-0012-04 | Rubber cap | |
| | B10-0212-14 | Front glass | |
| | B10-0197-03 | Front glass (dial) | |
| | B20-0373-04 | Dial scale | |
| | B20-0374-04 | Dial scale (A) mono-scale (front) | |
| | B20-0375-04 | Dial scale (B) mono-scale (back) | |
| | B30-0079-05 | Pilot lamp 12V, 40 mA | |
| | B40-1410-04 | Model name plate | |
| | B50-1538-00 | Operating manual | |
| | D23-0142-05 | Ball retainer | |
| | E01-0903-05 | 9P MT socket | |
| | E05-0901-05 | 9P MT plut with lead × 2 | |
| | E09-0204-05 | 2P plug socket | |
| | E14-0101-05 | 1P plug | |
| | E23-0046-04 | Terminal (square) × 6 | |
| | E23-0047-04 | Terminal (square) × 9 | |
| | E23-0069-05 | Terminal (for earth cable) × 2 | |
| | E31-0035-05 | 7P connector with lead | |
| | F15-0210-04 | Blinding plate | |
| | H01-1587-04 | Carton case (inside) | |
| | H03-0528-04 | Carton case (outside) | |
| | H12-0047-03 | Cushion (F) | |
| | H10-0968-03 | Cushion (R) | |
| | H20-0372-04 | Protection cover | |
| | H25-0103-04 | Polyethylene bag | |
| | H25-0029-04 | Polyethylene bag | |
| | J01-0025-04 | Leg (small) | |
| | J02-0049-14 | Leg (28ϕ) × 4 | |
| | J19-1301-04 | Diode holder × 2 | |
| | J21-1495-04 | Lamp stopper | |
| | J21-1503-04 | VFO stopper | |
| | J21-1570-04 | PC board stopper | |
| | J32-0222-04 | Boss A (for dial scale A) | |
| | J32-0223-14 | Boss B (for dial scale B) | |
| | J32-1030-14 | Round boss (holding leg) | |
| | J41-0020-04 | Knob bushing | |
| | J61-0019-05 | Vinvl tie × 7 | |
| | K21-0267-04 | Knob × 2, RIT, Function | |
| | K23-0709-03 | Knob, MAIN | |
| | K29-0166-04 | Knob, push | |
| | K29-0269-04 | Knob, calibration | |
| | X40-1110-00 | VFO unit | |
| | X41-1080-00 | Switch unit | |
| | X54-1180-01 | Indicator unit | |

## SWITCH UNIT (X41-1080-00)

| Ref. No. | Parts No. | Description | Remarks |
|---|---|---|---|
| | | **CAPACITOR** | |
| C1 | CK45F1H103Z | Ceramic 0.01μF +80% −20% | |
| | | **RESISTOR** | |
| R1 | PD14BY2E392J | Carbon 3.9kΩ ±5% 1/4W | |
| R2 | PD14BY2E102J | Carbon 1kΩ ±5% 1/4W | |
| | | **SEMICONDUCTOR** | |
| D1 | V11-0219-05 | Diode V06B | |
| | | **POTENTIOMETER** | |
| VR1 | R12-3022-05 | 10kΩ (B) | |
| | | **SWITCH/RELAY** | |
| S1 | S29-1093-05 | Rotary switch | |
| RL1 | S51-4031-05 | Relay | |
| | | **MISCELLANEOUS** | |
| — | E23-0047-04 | Terminal (square) | |
| — | E40-0713-05 | Mini-connector | |
| — | J12-0048-05 | Relay cramper | |

## INDICATOR UNIT (X54-1180-01)

| Ref. No. | Parts No. | Description | Remarks |
|---|---|---|---|
| | | **RESISTER** | |
| R3 | PD14BY2E681J | Carbon 680Ω ±5% 1/4W | |
| R4 | PD14BY2E471J | Carbon 470Ω ±5% 1/4W | |
| | | **SEMICONDUCTOR** | |
| D3,4 | V11-0430-05 | LED SEL-103W | |
| | | **MISCELLANEOUS** | |
| — | E23-0046-04 | Terminal (square) × 3 | |
| — | F20-0501-04 | Insulator × 2 | |
| — | R92-0150-05 | Short jamper | |

## PACKING VFO-820

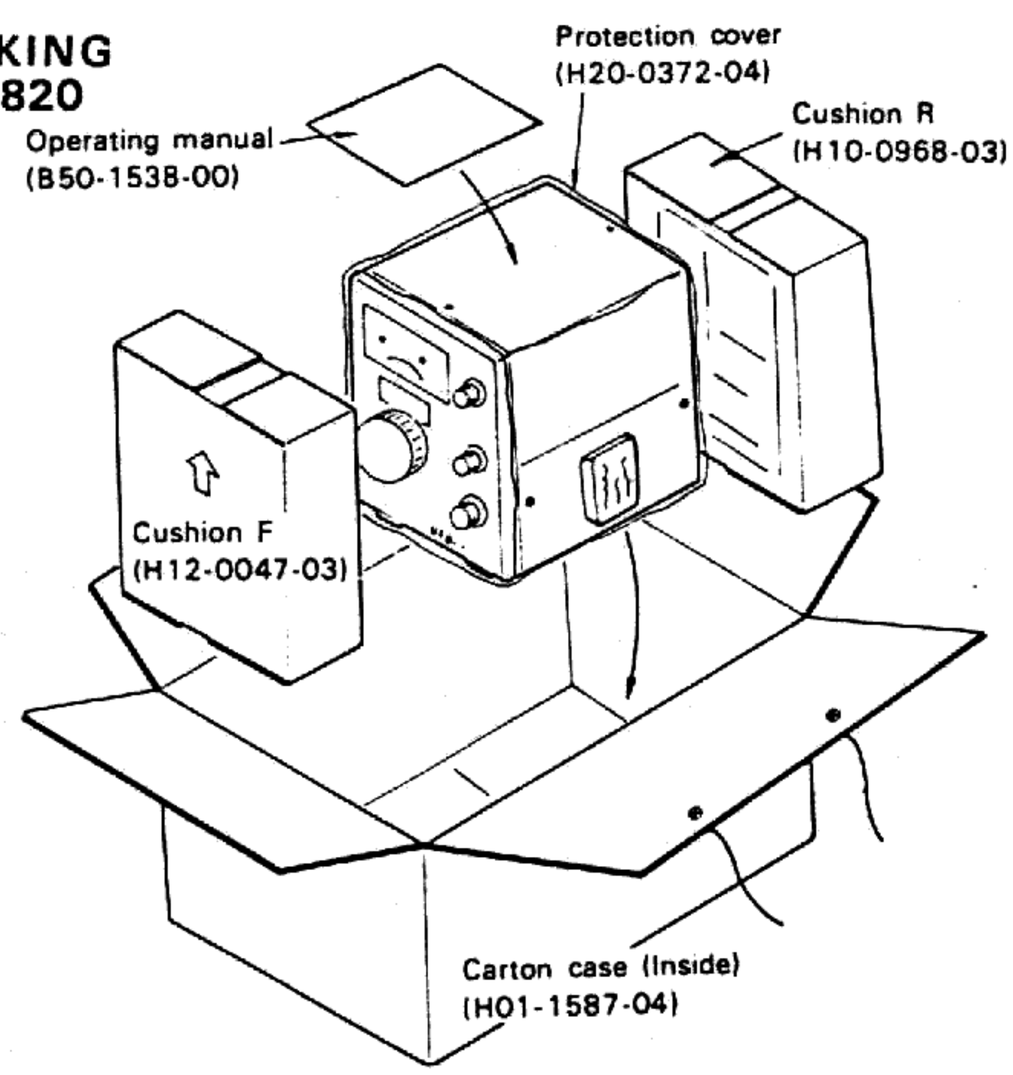

## DG-1 SPECIFICATIONS

**RANGE OF FREQUENCIES DISPLAYED:**

Displays all the transmit/receive frequencies of TS-820 to the accuracy of 0.1 kHz order.

**ACCURACY OF STANDARD OSCILLATOR:**

Within $\Delta f = 1 \times 10^{-6}$ after one month of ageing under ambient temperatures of 0°C ~ 50°C.

**OPERATING TEMPERATURE:**

−10°C ~ +50°C

**SEMICONDUCTORS AND INDICATOR:**

| | |
|---|---|
| IC | 33 |
| Transistor | 22 |
| Diode | 28 |
| Fluorescent indicating tube (6 digits) | 1 |

With regard to adjustment and installation of DG-1, refer to page 36, 48 and the operating manual.

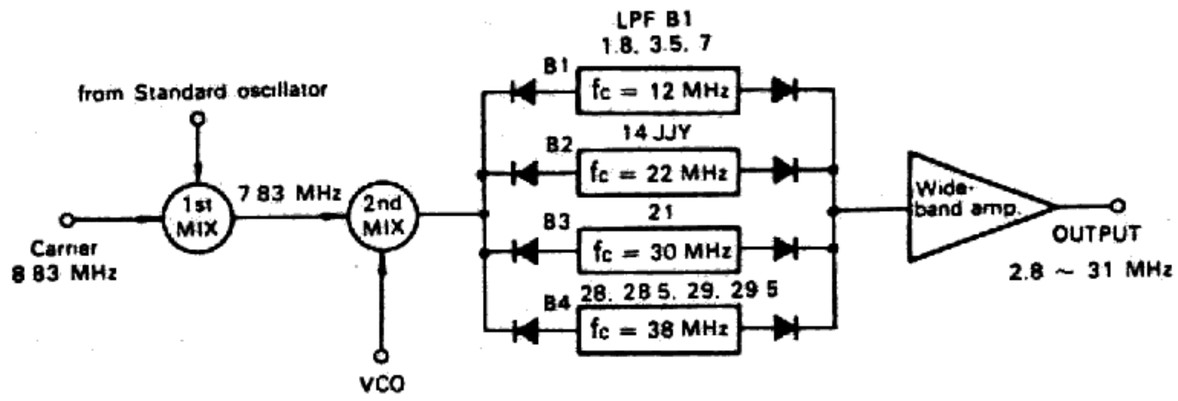


| BAND MHz | VCO Freq. (MHz) | Output freq. (MHz) | LPF BAND |
|---|---|---|---|
| 1.8 | 10.63 ~ 11.13 | 2.8 ~ 3.3 | B1 |
| 3.5 | 12.33 ~ 12.83 | 4.5 ~ 5.0 | B1 |
| 7 | 15.83 ~ 16.33 | 8.0 ~ 8.5 | B1 |
| 14 | 22.83 ~ 23.33 | 15.0 ~ 15.5 | B2 |
| JJY (15) | 23.83 ~ 24.33 | 16.0 ~ 16.5 | B2 |
| 21 | 29.83 ~ 30.33 | 22.0 ~ 22.5 | B3 |
| 28 | 36.83 ~ 37.33 | 29.0 ~ 29.5 | B4 |
| 28.5 | 37.33 ~ 37.83 | 29.5 ~ 30.0 | B4 |
| 29 | 37.83 ~ 38.33 | 30.0 ~ 30.5 | B4 |
| 29.5 | 38.33 ~ 38.83 | 30.5 ~ 31.0 | B4 |

**Digital counter mixer and frequency**

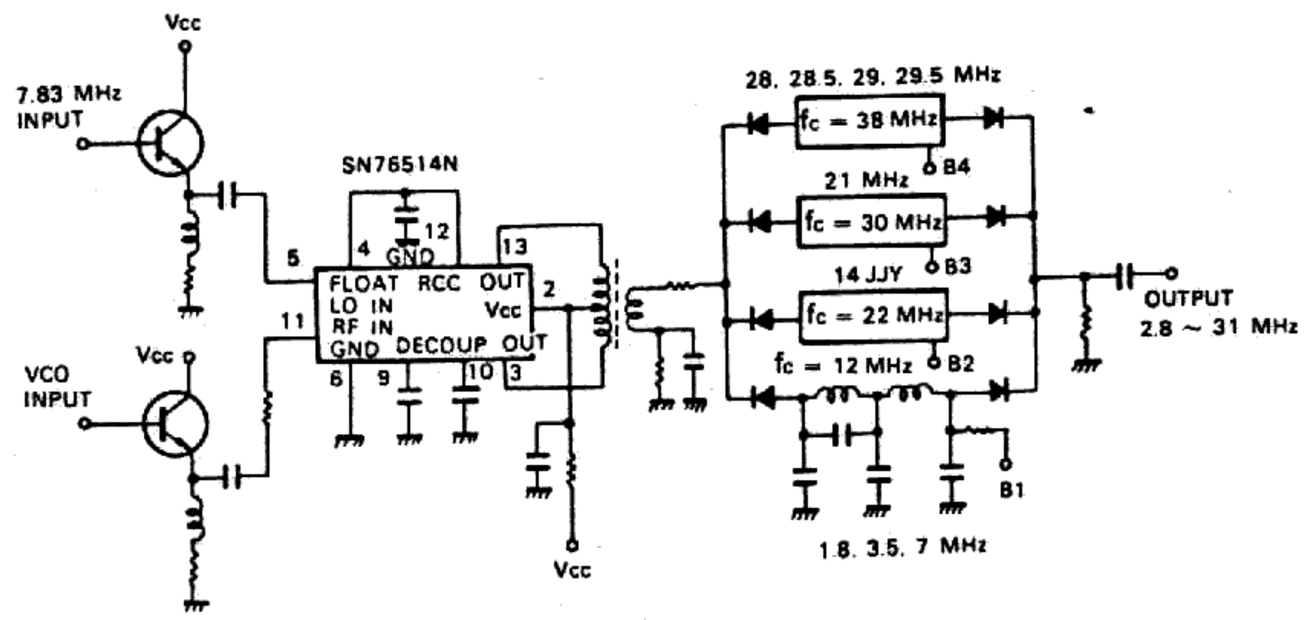


**Second mixer circuit diagram**

## BLOCK DIAGRAM

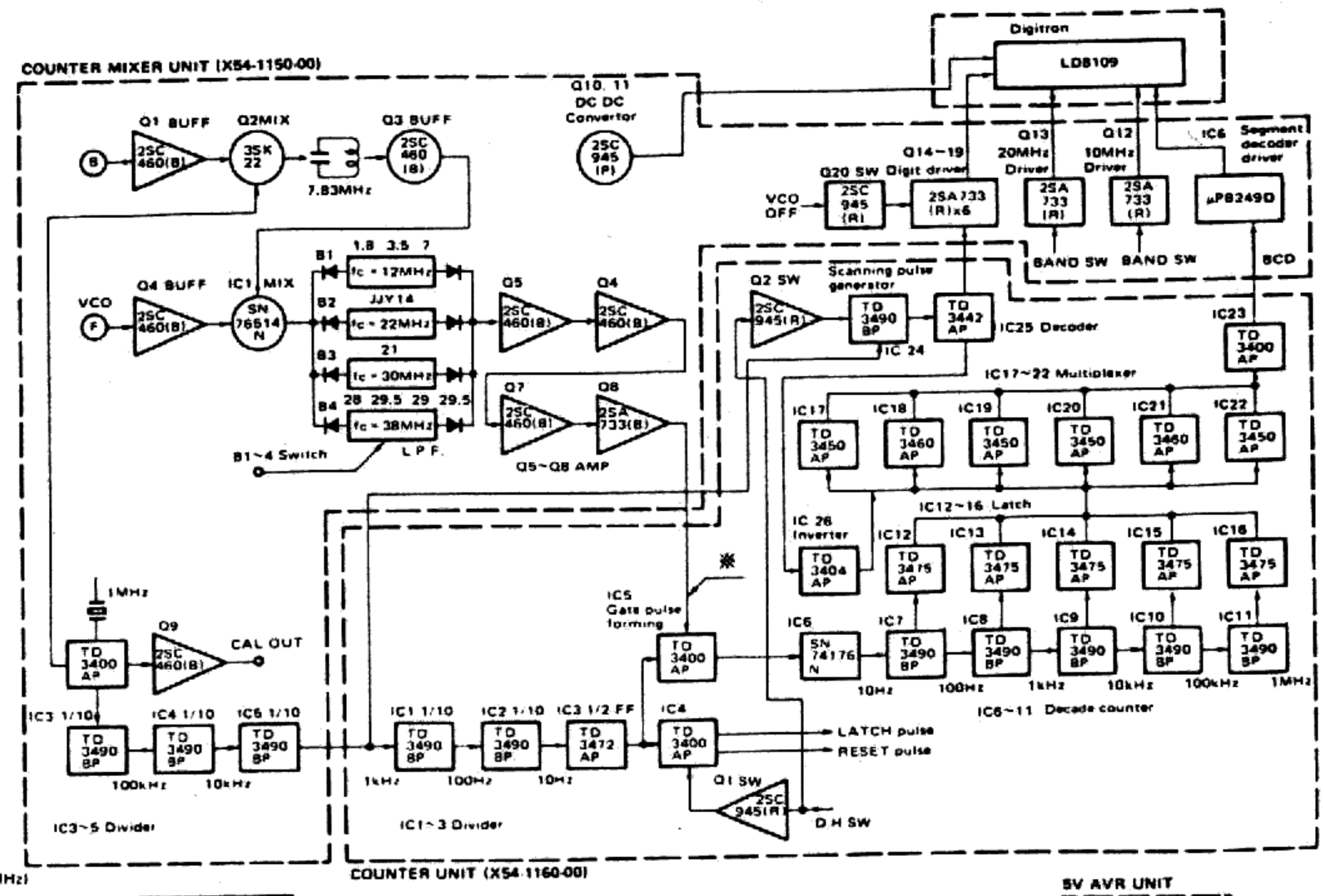


※ Counter Freq. (When CAR Freq. = 8.830 MHz)

| BAND | VCO Freq. | Counter Freq | BAND | VCO Freq. | Counter Freq. |
|---|---|---|---|---|---|
| JJY/WWV | 23.83~24.33 | 16.00~16.50 | 21 | 29.83~30.33 | 22.00~22.50 |
| 1.8 | 10.63~11.13 | 2.80~3.30 | 28 | 36.83~37.33 | 29.00~29.50 |
| 3.5 | 12.33~12.83 | 4.50~5.00 | 28.5 | 37.33~37.83 | 29.50~30.00 |
| 7 | 15.83~16.33 | 8.00~8.50 | 29 | 37.83~38.33 | 30.00~30.50 |
| 14 | 22.83~23.33 | 15.00~15.50 | 29.5 | 38.33~38.83 | 30.50~31.00 |

## DG-1

| Ref. No. | Parts No. | Description | Remarks |
|---|---|---|---|
| | | **MISCELLANEOUS** | |
| | B50-1566-00 | Operating manual | |
| | E31-0039-05 | Cable (for counter calibration) | |
| | H01-1614-03 | Carton case (inside) | |
| | H03-0543-04 | Carton case (outside) | |
| | H12-0048-04 | Cushion E | |
| | H12-0049-04 | Cushion C | |
| | H12-0050-04 | Cushion A | |
| | H12-0051-04 | Cushion B | |
| | H12-0052-04 | Cushion D | |
| | H12-0002-03 | Protection sheet | |
| | H25-0077-03 | Protection cover × 3 | |
| | H25-0112-04 | Protection cover | |
| | J32-0221-04 | Hexagonal boss × 2 | |
| | X43-1220-00 | 5V-AVR unit | |
| | X54-1170-00 | Display unit | |
| | X60-1020-00 | Counter ass'y unit | |

## 5V-AVR (X43-1220-00)

| Ref. No. | Parts No. | Description | Remarks |
|---|---|---|---|
| | | **CAPACITOR** | |
| C1 | CE04W1E470 | Electrolytic 47μF ±10% | |
| C2 | CQ93M1H104K | Mylar 0.1μF ±10% | |
| C3 | CQ93M1H104K | Mylar 0.1μF ±10% | |
| | | **RESISTOR** | |
| R1 | RW98A3H5R6K | Cement 5.6Ω ±10% 5W | |
| | | **SEMICONDUCTOR** | |
| Q1 | V30-0171-05 | IC MC7805CP | |
| | | **MISCELLANEOUS** | |
| — | E40-0413-05 | Mini-connector | |
| — | F01-0244-04 | Heat sink | |
| — | F01-0253-04 | Heat sink (resistor) | |

## DISPLAY (X54-1170-00)

| Ref. No. | Parts No. | Description | Remarks |
|---|---|---|---|
| | | **MISCELLANEOUS** | |
| — | E31-0021-15 | Connector 16P with lead | |
| — | G13-0107-04 | Sponge | |
| — | J19-0485-04 | Indicating tube stopper | |
| — | J21-1493-04 | Indicating tube stopper | |
| — | V11-0429-05 | Indicating tube LD8109 | |

## COUNTER ASS'Y (X60-1020-00)

| Ref. No. | Parts No. | Description | Remarks |
|---|---|---|---|
| | | **MISCELLANEOUS** | |
| — | E40-0625-05 | Chassis mounter | |
| — | E40-1225-05 | Chassis mounter | |
| — | F11-0231-03 | Counter shield box | |
| — | F11-0232-13 | Counter shield case | |
| — | X54-1150-00 | Counter mixer unit | |
| — | X54-1160-00 | Counter unit | |

## COUNTER MIXER (X54-1150-00)

| Ref. No. | Parts No. | Description | Remarks |
|---|---|---|---|
| | | **CAPACITOR** | |
| C1 | CK45F1H103Z | Ceramic 0.01μF +80%−20% | |
| C2 | CK45F1H223Z | Ceramic 0.022μF +80%−20% | |
| C3 | KC45B1H102K | Ceramic 0.001μF ±10% | |
| C4 | CK45F1H223Z | Ceramic 0.022μF +80%−20% | |
| C5 | CC45RH1H220J | Ceramic 22pF ±5% | |
| C6 | CK45F1H223Z | Ceramic 0.022μF +80%−20% | |
| C7 | CC45CH1H020C | Ceramic 2pF ±0.25pF | |
| C8 | CC45RH1H220J | Ceramic 22pF ±5% | |
| C9 | CC45CH1H330J | Ceramic 33pF +80%−20% | |
| C10,11 | CK45F1H223Z | Ceramic 0.022μF +80%−20% | |
| C12 | CK45F1H103Z | Ceramic 0.01μF +80%−20% | |
| C13 | CK45F1H223Z | Ceramic 0.022μF +80%−20% | |
| C14 | CK45F1H103Z | Ceramic 0.01μF +80%−20% | |
| C15～19 | CK45F1H223Z | Ceramic 0.022μF +80%−20% | |
| C20 | CC45CH1H470J | Ceramic 47pF ±5% | |
| C21 | CC45CH1H390J | Ceramic 39pF ±5% | |
| C22 | CC45SL1H121J | Ceramic 120pF ±5% | |
| C23 | CC45SL1H680J | Ceramic 68pF ±5% | |
| C24 | CK45F1H223Z | Ceramic 0.022μF +80%−20% | |
| C25,26 | CC45CH1H220J | Ceramic 22pF ±5% | |
| C27 | CC45SL1H560J | Ceramic 56pF ±5% | |
| C28 | CC45CH1H390J | Ceramic 39pF ±5% | |
| C29 | CK45F1H223Z | Ceramic 0.022μF +80%−20% | |
| C30,31 | CC45CH1H180J | Ceramic 18pF ±5% | |
| C32 | CC45CH1H470J | Ceramic 47pF ±5% | |
| C33 | CC45CH1H330J | Ceramic 33pF ±5% | |
| C34 | CK45F1H223Z | Ceramic 0.022μF +80%−20% | |
| C35 | CC45CH1H120J | Ceramic 12pF ±5% | |
| C36 | CC45CH1H150J | Ceramic 15pF ±5% | |
| C37 | CC45CH1H330J | Ceramic 33pF ±5% | |
| C38 | CC45CH1H220J | Ceramic 22pF ±5% | |
| C39 | CK45F1H223Z | Ceramic 0.022μF +80%−20% | |
| C40 | CK45B1H102K | Ceramic 0.001μF ±10% | |
| C41 | CK45F1H223Z | Ceramic 0.022μF +80%−20% | |
| C42 | CK45B1H102K | Mylar 0.001μF ±10% | |
| C43 | CQ92M1H472K | Ceramic 0.0047μF ±10% | |
| C44 | CK45B1H102K | Ceramic 0.001μF ±10% | |
| C45,46 | CK45F1H223Z | Ceramic 0.022μF +80%−20% | |
| C53 | CK45F1H103Z | Ceramic 0.01μF +80%−20% | |
| C54 | CK45B1H331K | Ceramic 330pF ±10% | |
| C55 | CK45B1H681K | Ceramic 680pF ±10% | |
| C56 | CK45B1H331K | Ceramic 330pF ±10% | |
| C57 | CQ92M1H104K | Mylar 0.1μF ±10% | |
| C59 | CS15E1VR33M | Tantalum 0.033μF ±20% | |
| C60 | CK45B1H102K | Ceramic 0.001μF ±10% | |

# DG-1

| Ref. No. | Parts No. | Description | | | | Remarks |
|---|---|---|---|---|---|---|
| C61 | CE04W1H100(RL) | Electrolytic | 10μF | 50WV | | |
| C62 | CK45F1H223Z | Ceramic | 0.022μF | +80%−20% | | |
| C63,64 | CE04W1E100(RL) | Electrolytic | 10μF | 25WV | | |
| C65 | C90-0262-05 | Ceramic | 0.047μF | | | |
| C66,67 | CK45F1H103Z | Ceramic | 0.01μF | +80%−20% | | |
| C68 | CE04W1A101(RL) | Electrolytic | 100μF | 10WV | | |
| C69 | C90-0262-05 | Ceramic | 0.047μF | | | |
| C71 | CC45CH1H120J | Ceramic | 12pF | ±5% | | |
| C72 | CC45CH1H560J | Ceramic | 56pF | ±5% | | |
| C73 | CC45SL1H391J | Ceramic | 390pF | ±5% | | |
| C74 | CC45CH1H470J | Ceramic | 47pF | ±5% | | |
| C75 | CC45CH1H150J | Ceramic | 15pF | ±5% | | |
| C76 | C90-0262-05 | Ceramic | 0.047μF | | | |
| C77,78 | CK45F1H223Z | Ceramic | 0.022μF | +80%−20% | | |
| C79 | CK45B1H471K | Ceramic | 470pF | ±10% | | |
| C80 | CC45SL1H470J | Ceramic | 47pF | ±5% | | |
| C81 | CK45B1H331K | Ceramic | 330pF | ±10% | | |
| C82 | CC45CH1H010C | Ceramic | 1pF | ±0.25pF | | |
| C83 | CK45B1H102K | Ceramic | 0.001μF | ±10% | | |
| **RESISTOR** | | | | | | |
| R1 | PD14CY2B101J | Carbon | 100Ω | ±5% | 1/8W | |
| R2 | PD14CY2B154J | Carbon | 150kΩ | ±5% | 1/8W | |
| R3 | PD14CY2B221J | Carbon | 220Ω | ±5% | 1/8W | |
| R4 | PD14CY2B471J | Carbon | 470Ω | ±5% | 1/8W | |
| R5 | PD14CY2B104J | Carbon | 100kΩ | ±5% | 1/8W | |
| R6 | PD14CY2B332J | Carbon | 3.3kΩ | ±5% | 1/8W | |
| R7 | PD14CY2B103J | Carbon | 10kΩ | ±5% | 1/8W | |
| R8,9 | PD14CY2B101J | Carbon | 100Ω | ±5% | 1/8W | |
| R10 | PD14CY2B154J | Carbon | 150kΩ | ±5% | 1/8W | |
| R11 | PD14CY2B101J | Carbon | 100Ω | ±5% | 1/8W | |
| R12 | PD14CY2B471J | Carbon | 470Ω | ±5% | 1/8W | |
| R13,14 | PD14CY2B101J | Carbon | 100Ω | ±5% | 1/8W | |
| R15 | PD14CY2B224J | Carbon | 220kΩ | ±5% | 1/8W | |
| R16 | PD14CY2B101J | Carbon | 100Ω | ±5% | 1/8W | |
| R17 | PD14CY2B471J | Carbon | 470Ω | ±5% | 1/8W | |
| R18,19 | PD14CY2B101J | Carbon | 100Ω | ±5% | 1/8W | |
| R20 | PD14CY2B332J | Carbon | 3.3kΩ | ±5% | 1/8W | |
| R21 | PD14CY2B100J | Carbon | 10Ω | ±5% | 1/8W | |
| R22～24 | PD14CY2B181J | Carbon | 180Ω | ±5% | 1/8W | |
| R25 | PD14CY2B331J | Carbon | 330Ω | ±5% | 1/8W | |
| R26 | PD14CY2B332J | Carbon | 3.3kΩ | ±5% | 1/8W | |
| R27 | PD14CY2B101J | Carbon | 100Ω | ±5% | 1/8W | |
| R28 | PD14CY2B103J | Carbon | 10kΩ | ±5% | 1/8W | |
| R29 | PD14CY2B101J | Carbon | 100Ω | ±5% | 1/8W | |
| R30 | PD14CY2B331J | Carbon | 330Ω | ±5% | 1/8W | |
| R31 | PD14CY2B102J | Carbon | 1kΩ | ±5% | 1/8W | |
| R32 | PD14CY2B100J | Carbon | 10Ω | ±5% | 1/8W | |
| R33 | PD14CY2B221J | Carbon | 220Ω | ±5% | 1/8W | |
| R34 | PD14BY2B333J | Carbon | 33kΩ | ±5% | 1/8W | |
| R35 | PD14CY2B271J | Carbon | 270Ω | ±5% | 1/8W | |
| R36 | PD14CY2B102J | Carbon | 1kΩ | ±5% | 1/8W | |
| R44 | PD14CY2B471J | Carbon | 470Ω | ±5% | 1/8W | |
| R45 | PD14CY2B561J | Carbon | 560Ω | ±5% | 1/8W | |
| R46 | PD14CY2B101J | Carbon | 100Ω | ±5% | 1/8W | |
| R47 | PD14CY2B100J | Carbon | 10Ω | ±5% | 1/8W | |
| R48～55 | PD14CY2B472J | Carbon | 4.7kΩ | ±5% | 1/8W | |
| R56 | PD14CY2B821J | Carbon | 820Ω | ±5% | 1/8W | |
| R57,58 | PD14CY2B472J | Carbon | 4.7kΩ | ±5% | 1/8W | |
| R59,60 | PD14CY2B471J | Carbon | 470Ω | ±5% | 1/8W | |
| R61 | PD14CY2B102J | Carbon | 1kΩ | ±5% | 1/8W | |
| R62 | PD14CY2B272J | Carbon | 2.7kΩ | ±5% | 1/8W | |
| R63 | PD14CY2B224J | Carbon | 220kΩ | ±5% | 1/8W | |

| Ref. No. | Parts No. | Description | | | | Remarks |
|---|---|---|---|---|---|---|
| R64 | PD14CY2B103J | Carbon | 10kΩ | ±5% | 1/8W | |
| R65 | PD14CY2B822J | Carbon | 8.2kΩ | ±5% | 1/8W | |
| R66 | PD14CY2B222J | Carbon | 2.2kΩ | ±5% | 1/8W | |
| R67 | PD14CY2B223J | Carbon | 22kΩ | ±5% | 1/8W | |
| R68 | PD14CY2B152J | Carbon | 1.5kΩ | ±5% | 1/8W | |
| R69 | PD14CY2B471J | Carbon | 470Ω | ±5% | 1/8W | |
| R70 | PD14CY2B101J | Carbon | 100Ω | ±5% | 1/8W | |
| R71 | PD14CY2B103J | Carbon | 10kΩ | ±5% | 1/8W | |
| R72 | PD14CY2B222J | Carbon | 2.2kΩ | ±5% | 1/8W | |
| R73 | PD14CY2B472J | Carbon | 4.7kΩ | ±5% | 1/8W | |
| R74 | PD14CY2B103J | Carbon | 10kΩ | ±5% | 1/8W | |
| R75 | PD14CY2B102J | Carbon | 1kΩ | ±5% | 1/8W | |
| R76 | PD14BY2B183J | Carbon | 18kΩ | ±5% | 1/8W | |
| RB1,2 | R90-0112-05 | Carbon | 47kΩ × 7 | | | |
| RB3 | R90-0113-05 | Carbon | 47kΩ × 6 | | | |
| **SEMICONDUCTOR** | | | | | | |
| IC1 | V30-0153-05 | IC | SN76514N | | | |
| IC2～5 | V30-0151-05 | IC | TD3490BP | | | |
| IC6 | V30-0170-05 | IC | μPB249D | | | |
| Q1 | V03-0079-05 | Transistor | 2SC460(B) | | | |
| Q2 | V09-0023-05 | FET | 2SK22(GR) | | | |
| Q3～7 | V03-0079-05 | Transistor | 2SC460(B) | | | |
| Q8 | V01-0084-05 | Transistor | 2SA733(R) | | | |
| Q9 | V03-0079-05 | Transistor | 2SC460(B) | | | |
| Q10,11 | V03-0270-05 | Transistor | 2SC945(R) | | | |
| Q12～19 | V01-0084-05 | Transistor | 2SA733(R) | | | |
| Q20 | V03-0270-05 | Transistor | 2SC945(R) | | | |
| Q21 | V03-0079-05 | Transistor | 2SC460(B) | | | |
| Q22 | V01-0084-05 | Transistor | 2SA733(R) | | | |
| D1～8 | V11-0414-05 | Diode | 1S2588 | | | |
| D9～12 | V11-0076-05 | Diode | 1S1555 | | | |
| D13,14 | V21-0007-05 | Varistor | SV-03 | | | |
| D15 | V11-0076-05 | Diode | 1S1555 | | | |
| D16 | V11-0482-05 | Zener diode | BZ-220 | | | |
| C17 | V21-0007-05 | Varistor | SV03 | | | |
| D18～28 | V11-0076-05 | Diode | 1S1555 | | | |
| D29 | V11-0240-05 | Zener diode | WZ090 | | | |
| **COIL/TRIMMER** | | | | | | |
| L1,2 | L40-4711-03 | Ferri-inductor | 470μH | | | |
| L3 | L40-6801-03 | Ferri-inductor | 68μH | | | |
| L4 | L40-3391-03 | Ferri-inductor | 2.7μH | | | |
| L5 | L40-4719-02 | Ferri-inductor | 4.7μH | | | |
| L6 | L40-1592-02 | Ferri-inductor | 1.5μH | | | |
| L7 | L40-2792-02 | Ferri-inductor | 2.7μH | | | |
| L8 | L34-0523-05 | Tuning coil | 1μH | | | |
| L9 | L40-1892-02 | Ferri-inductor | 1.8μH | | | |
| L10 | L34-0526-05 | Tuning coil | 0.28μH | | | |
| L11 | L40-1592-02 | Ferri-inductor | 1.5μH | | | |
| L12～ | L40-4711-03 | Ferri-inductor | 470μH | | | |
| L18,19 | L40-6801-03 | Ferri-inductor | 68μH | | | |
| L20～22 | L40-4711-03 | Ferri-inductor | | | | |
| L23 | L33-0601-05 | Choke coil | 2.2μH | | | |
| T1,2 | L34-0522-05 | Tuning coil | 7.83MHz | | | |
| T3 | L34-0524-05 | Wide range transformer (BM output) | | | | |
| T4 | L19-0020-05 | Oscillating transformer (DC-DC converter) | | | | |
| X1 | L77-0482-05 | Crystal | 10 MHz | | | |
| TC1 | C05-0032-05 | Trimmer | 40pF | | | |
| **MISCELLANEOUS** | | | | | | |
| J1～3 | R92-0150-05 | Short jamper | | | | |

| Ref No. | Parts No. | Description | Re-marks |
|---|---|---|---|
| — | E23-0046-04 | Square terminal × 5 | |
| — | E40-0327-05 | Type U pin ass'y | |
| — | E40-0607-05 | Mini-connector × 3 | |
| — | E40-0826-05 | Type U pin ass'y × 2 | |
| — | E40-1714-05 | Mini-connector | |
| VR1 | R12-4021-05 | Semi-fixed resistor 50kΩ(B) | |

## COUNTER (X54-1160-00)

| Ref. No. | Parts No. | Description | Re-marks |
|---|---|---|---|
| | | **CAPACITOR** | |
| C1 | CC45CH1H101J | Ceramic 100pF ±5% | |
| C2 | CK45B1H102K | Ceramic 0.001μF ±10% | |
| C3 | CE04W1C220 | Electrolytic 22μF 16WV | |
| C4,5 | C90-0262-05 | Ceramic 0.047μF | |
| C6 | CE04W1A101 | Electrolytic 100μF 10WV | |
| C7～9 | C90-0262-05 | Ceramic 0.047μF | |
| | | **RESISTOR** | |
| R1,2 | PD14CY2B272J | Carbon 2.7kΩ ±5% 1/8W | |
| R3 | PD14CY2B472J | Carbon 4.7kΩ ±5% 1/8W | |
| R4,5 | PD14CY2B104J | Carbon 100kΩ ±5% 1/8W | |
| R6,7 | PD14CY2B821J | Carbon 820Ω ±5% 1/8W | |
| R8,9 | PD14CY2B103J | Carbon 10kΩ ±5% 1/8W | |
| | | **SEMICONDUCTOR** | |
| Q1,2 | V03-0270-05 | | |
| IC1,2 | V30-0151-05 | IC TD3490BP | |
| IC3 | V30-0131-05 | IC TD3472AP | |
| IC4 | V30-0132-05 | IC TD3400AP | |
| IC5 | V30-0169-05 | IC SN74H00N | |
| IC6 | V30-0168-05 | IC SN74176N | |
| IC7～11 | V30-0151-05 | IC TD3490BP | |
| IC12～16 | V30-0167-05 | IC TD3475AP | |
| IC17 | V30-0165-05 | IC TD3450AP | |
| IC18 | V30-0166-05 | IC TD3460AP | |
| IC19,20 | V30-0165-05 | IC TD3450AP | |
| IC21 | V30-0166-05 | IC TD3460AP | |
| IC22 | V30-0165-05 | IC TD3450AP | |
| IC23 | V30-0132-05 | IC TD3400AP | |
| IC24 | V30-0151-05 | IC TD3490BP | |
| IC25 | V30-0164-05 | IC TD3442AP | |
| IC26 | V30-0163-05 | IC TD3404AP | |
| | | **COIL/MISCELLANEOUS** | |
| L1 | L40-4701-03 | Ferri-inductor 17μH | |
| — | E40-0607-05 | Mini-connector × 3 | |

## PACKING

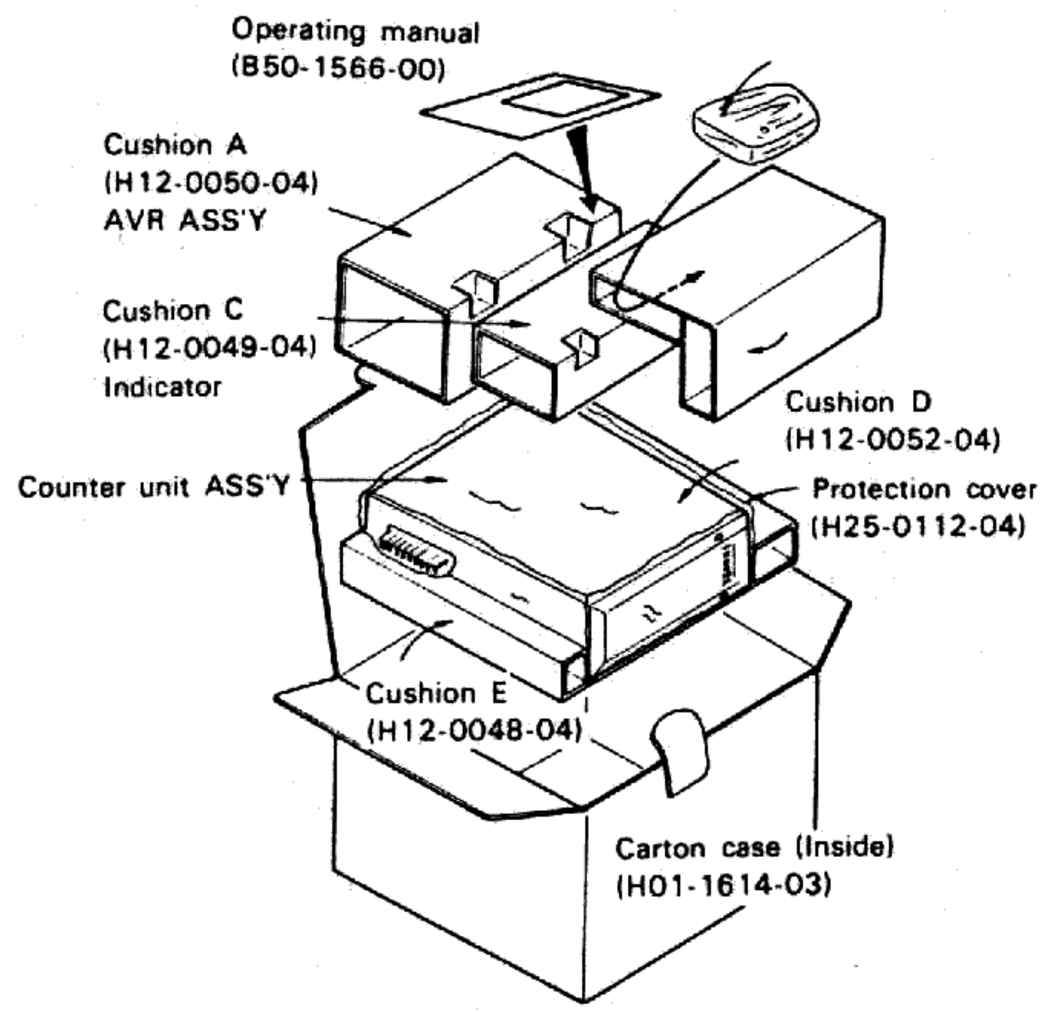

▼ DISPLAY (X54-1170-00)

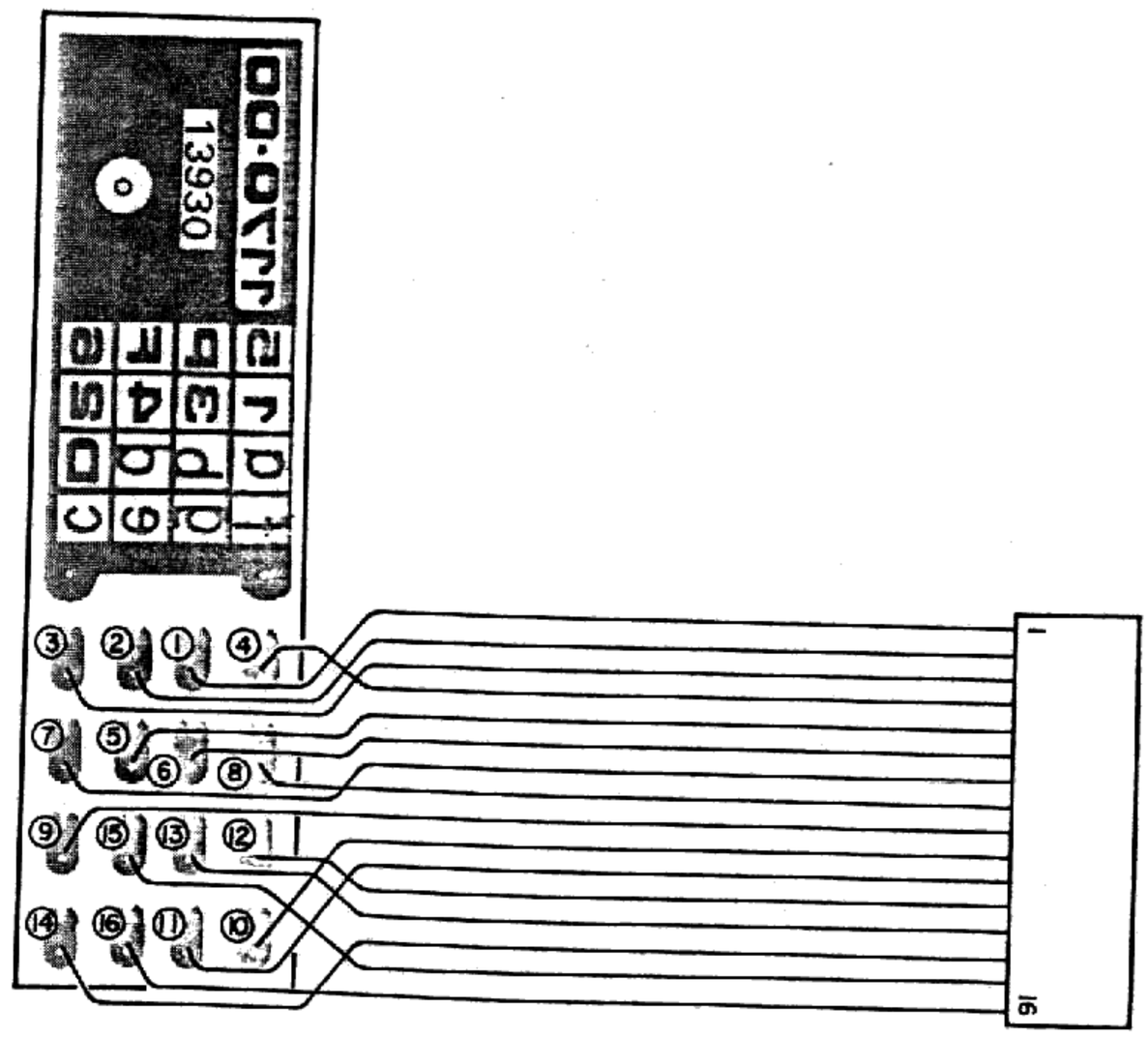


▼ 5V-AVR (X43-1220-00)

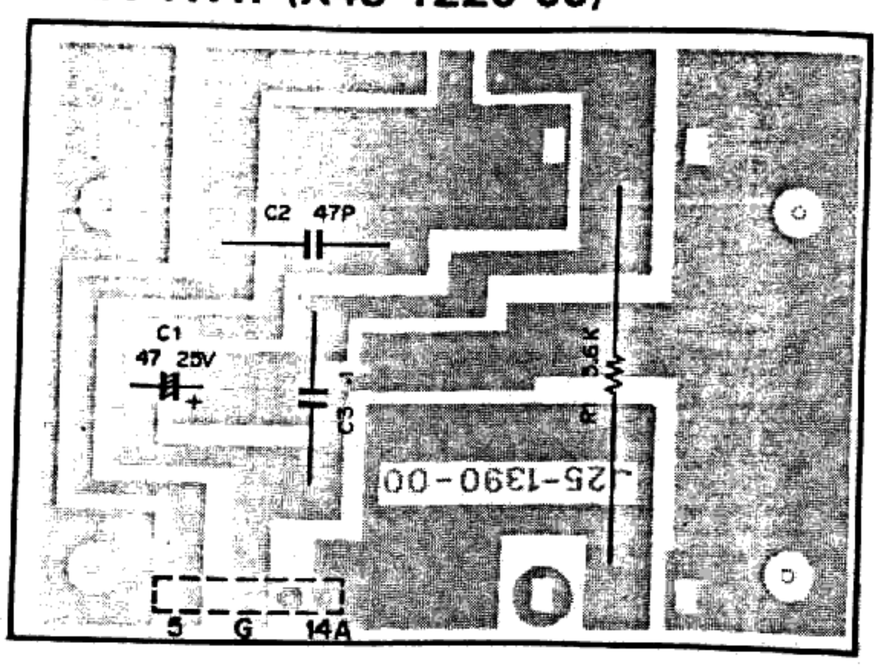


Q1: MC7805CP

MC7805CP

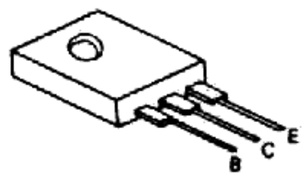


▼ DISPLAY (X54-1170-00)

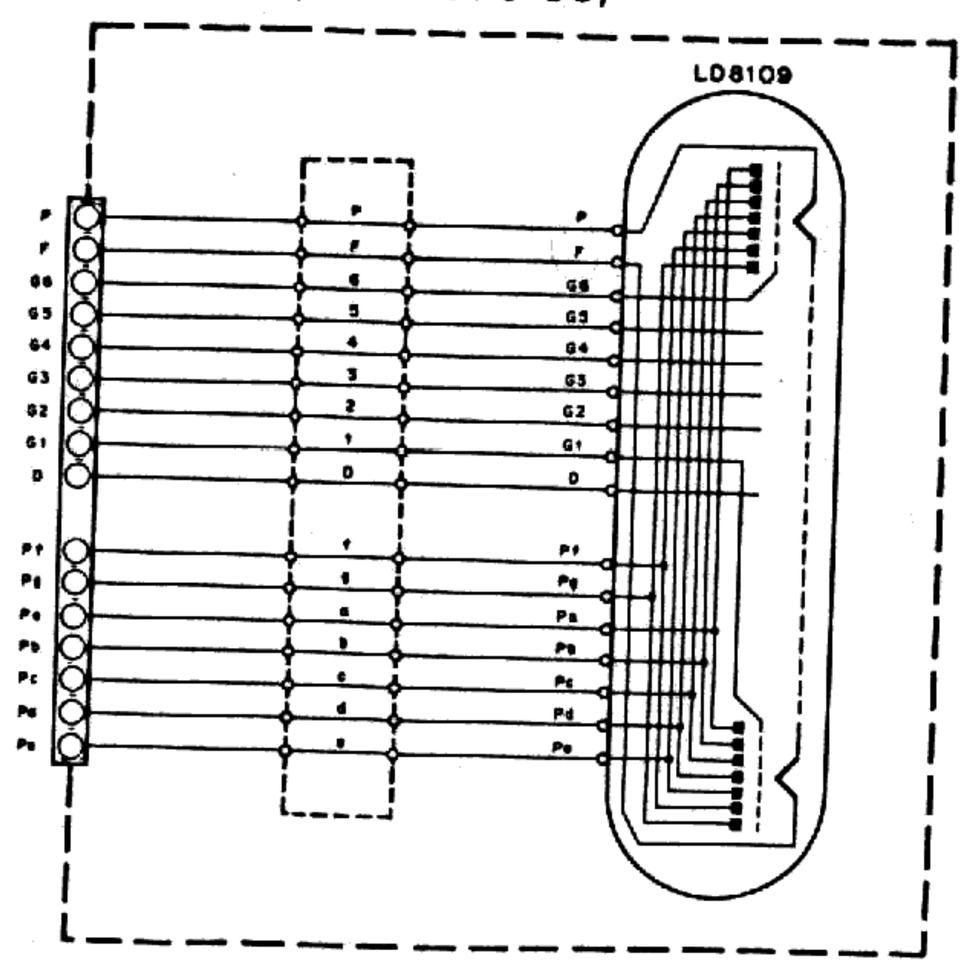


LD8109

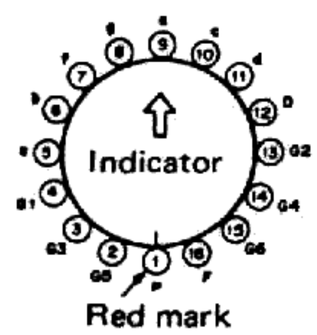


Red mark

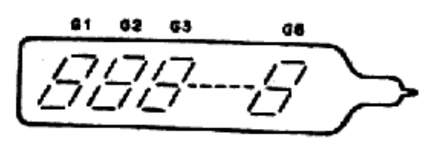

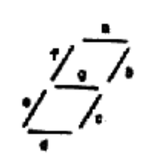

## ▼ COUNTER MIX (X54-1150-00)

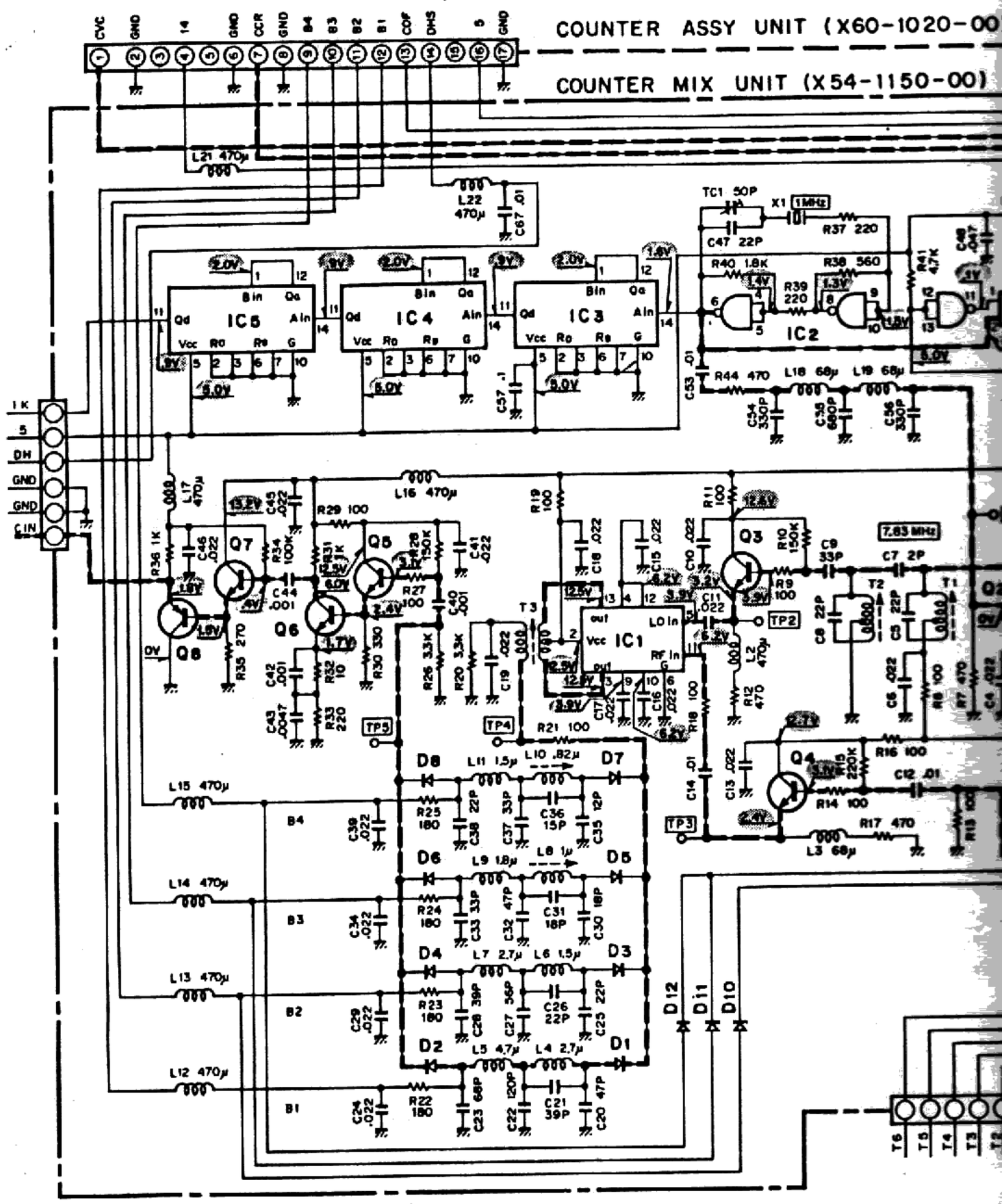


IC1: SN76514N, IC2: TD3400AP, IC3～5: TD3490BP, IC6: μPE
Q8,12～19: 2SA733(R), Q10,11,20: 2SC945(P, D1～8: 1S2588,
D16: BZ-220

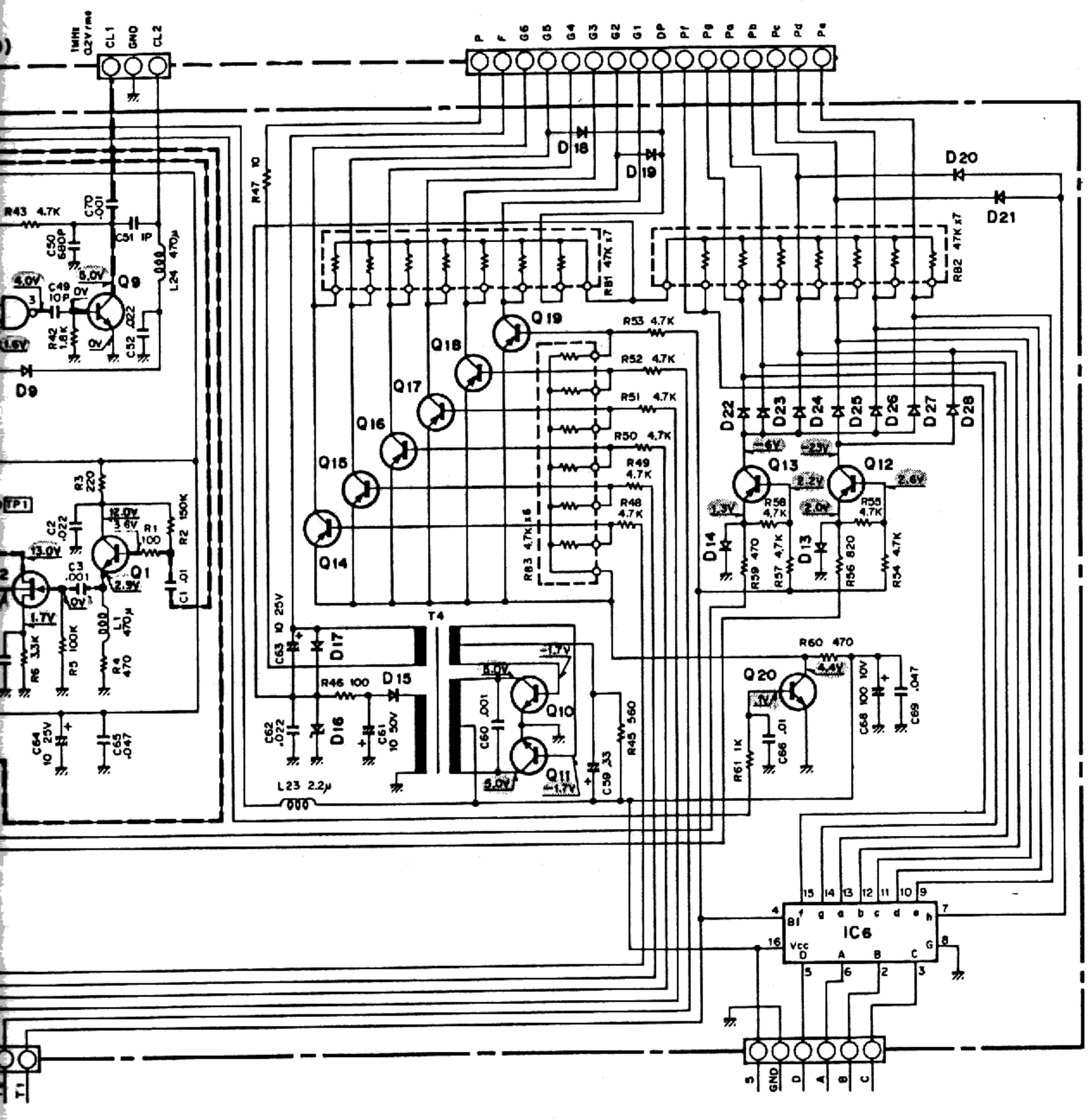


B249D, Q1,3～7,9: 2SC460(B), Q2: 3SK22(GR),
D9～12,15,18～26: 1S1555, D13,14,17: SV-03,

DG-1

# ▼ COUNTER MIX (X54-1150-00)

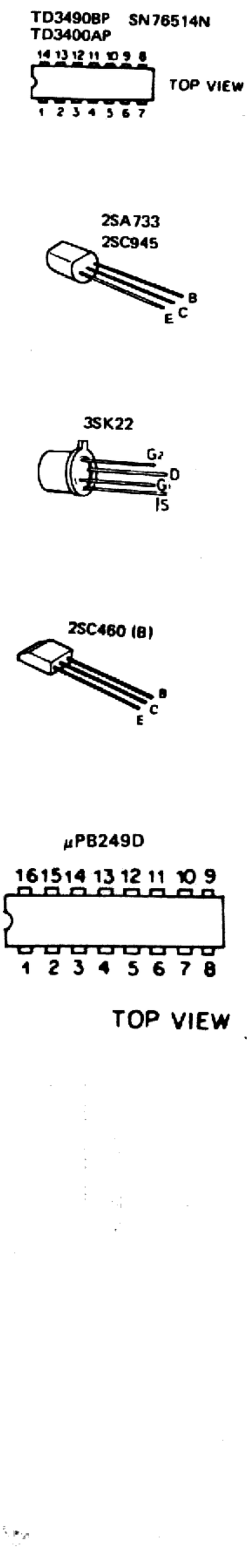


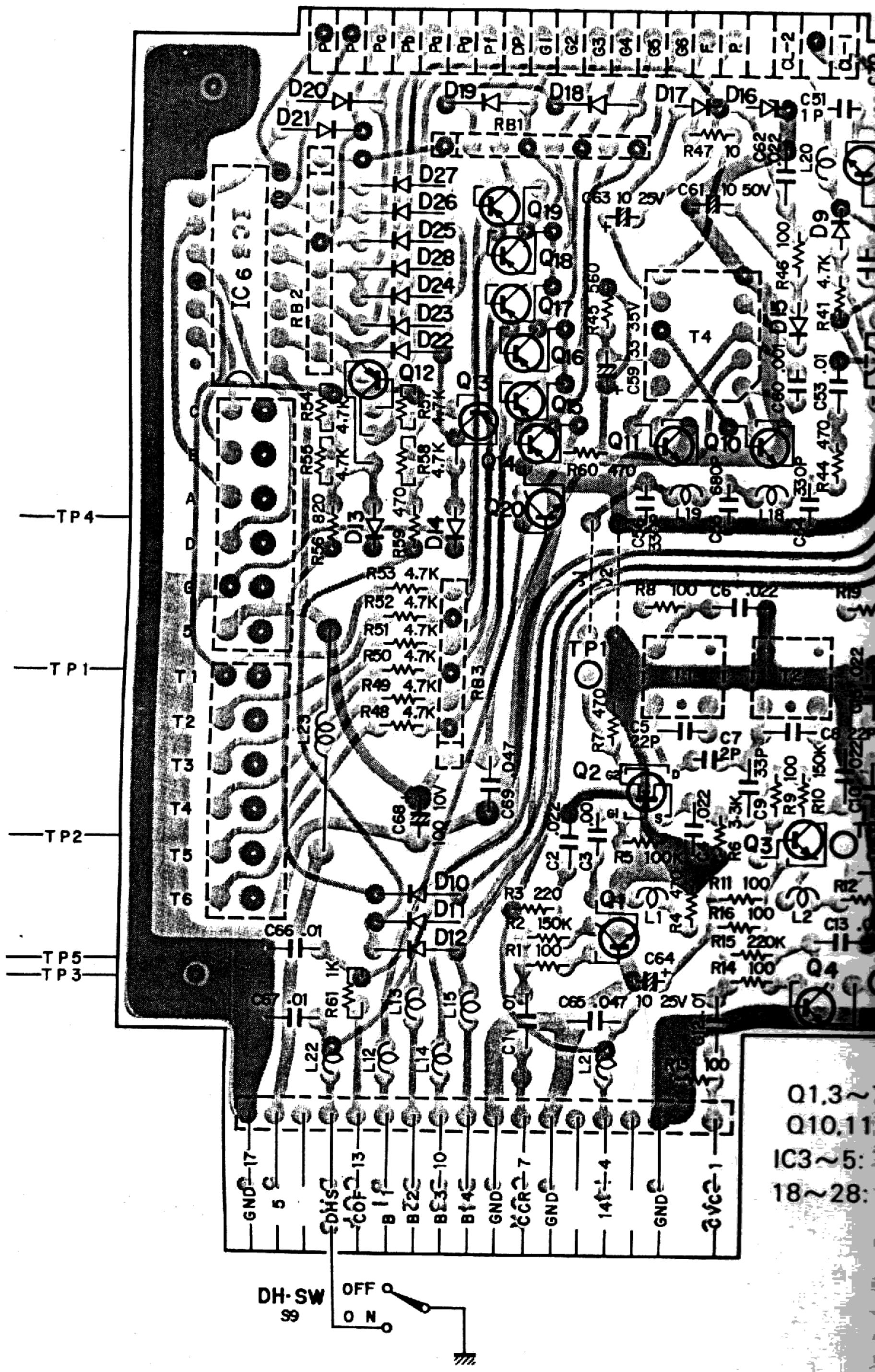

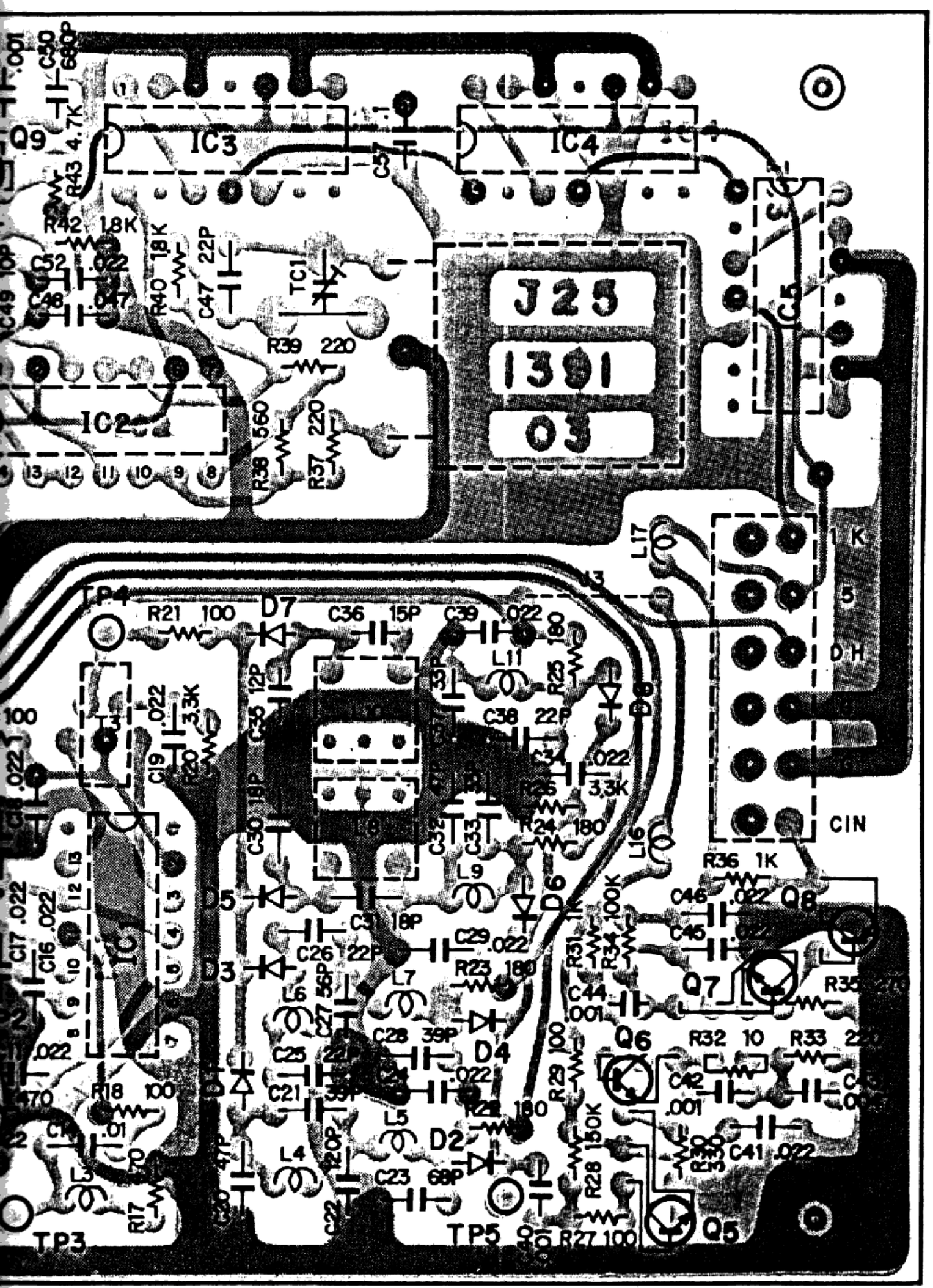


DG-1

7,9: 2SC460(B), Q2: 3SK22(GR), Q8,12～19: 2SA733(R),
,20: 2SC945(R), IC1: SN76514N, IC2: TD3400AP,
TD3490BP, IC6: μPB249D, D1～8: 1S2588, D9～12,15,
1S1555, D13,14,17: SV-03, D16: BZ-220

## ▼ COUNTER (X54-1160-00)

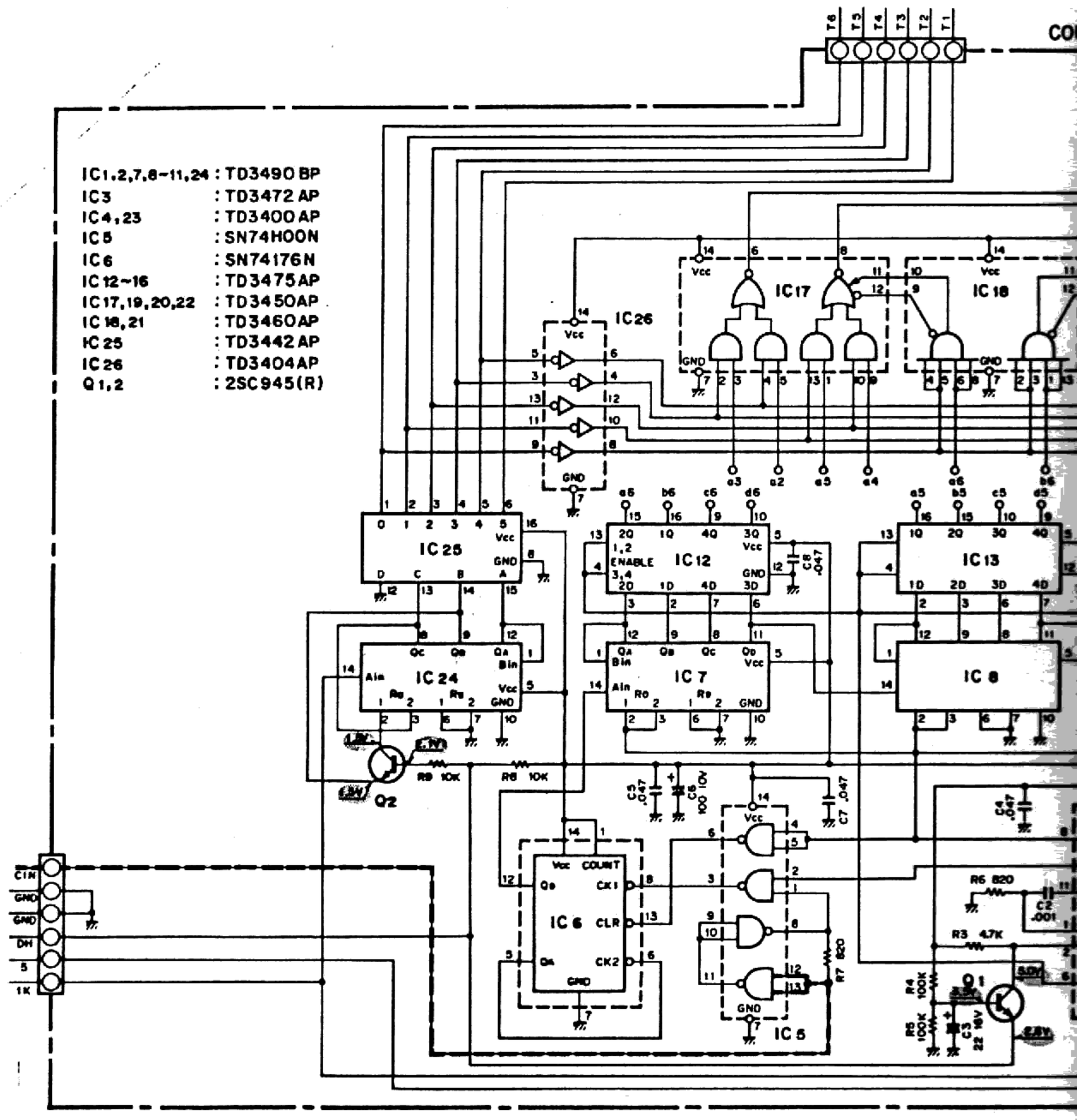


TD3400AP
TD3490BP
TD3472AP
TD3450AP
TD3460AP
TD3404AP
SN74H00N
SN74176N

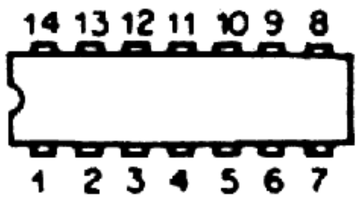


TOP VIEW

2SC945

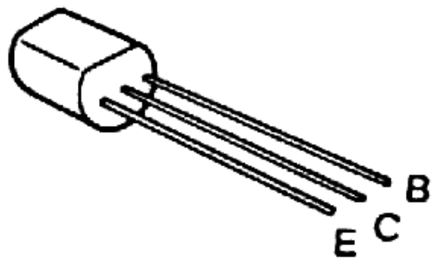


TD3475AP
TD3442AP

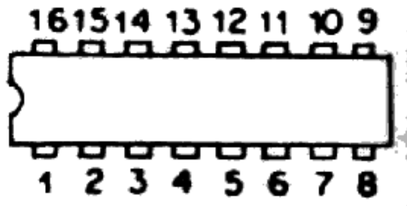

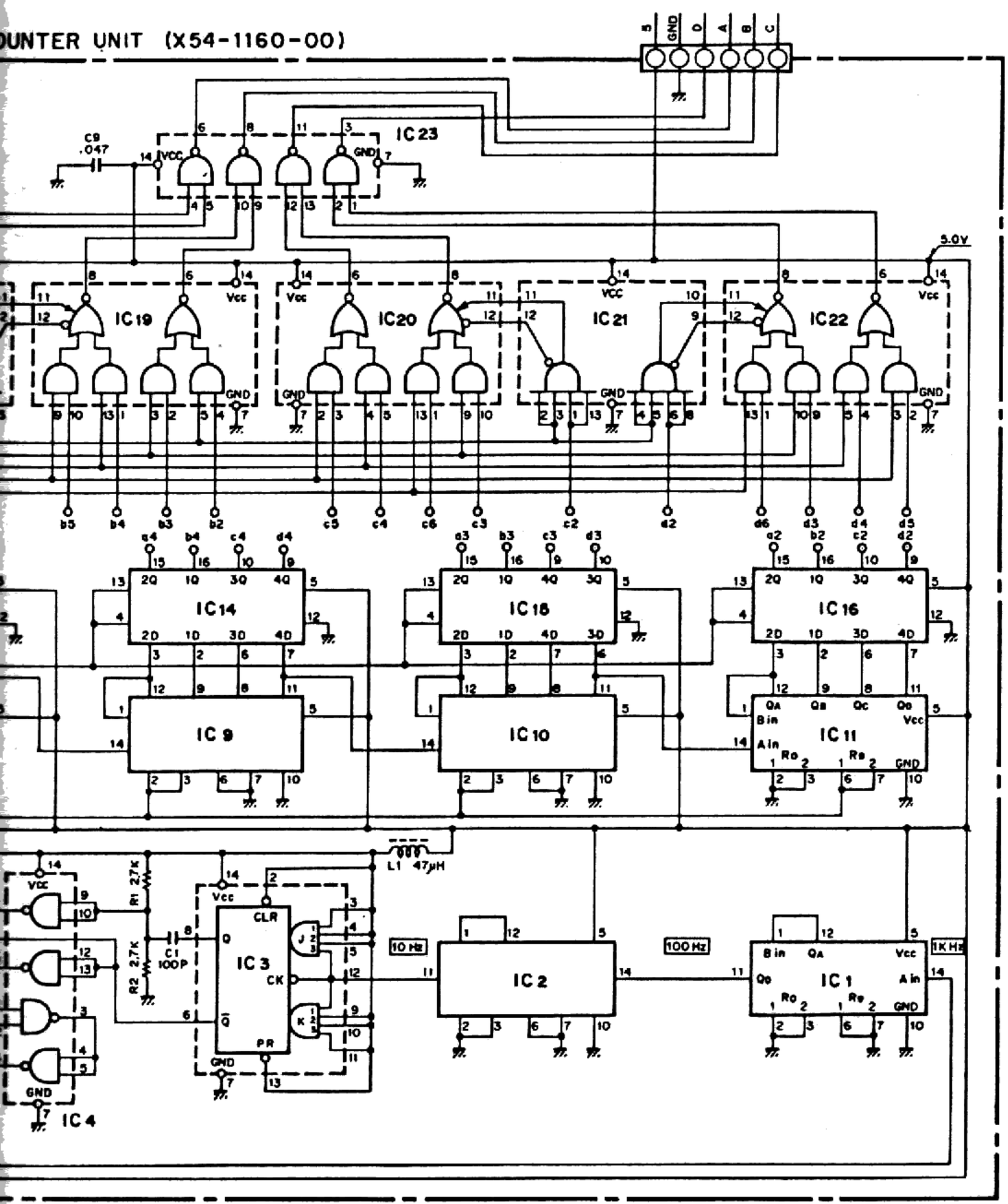
OUNTER UNIT (X54-1160-00)
IC23
IC19
IC20
IC21
IC22
IC14
IC18
IC16
IC9
IC10
IC11
IC3
IC2
IC1
IC4
C9 .047
L1 47μH
R1 2.7K
R2 2.7K
C1 100P
10 Hz
100 Hz
1K Hz
5.0V

DG-1

TOP VIEW

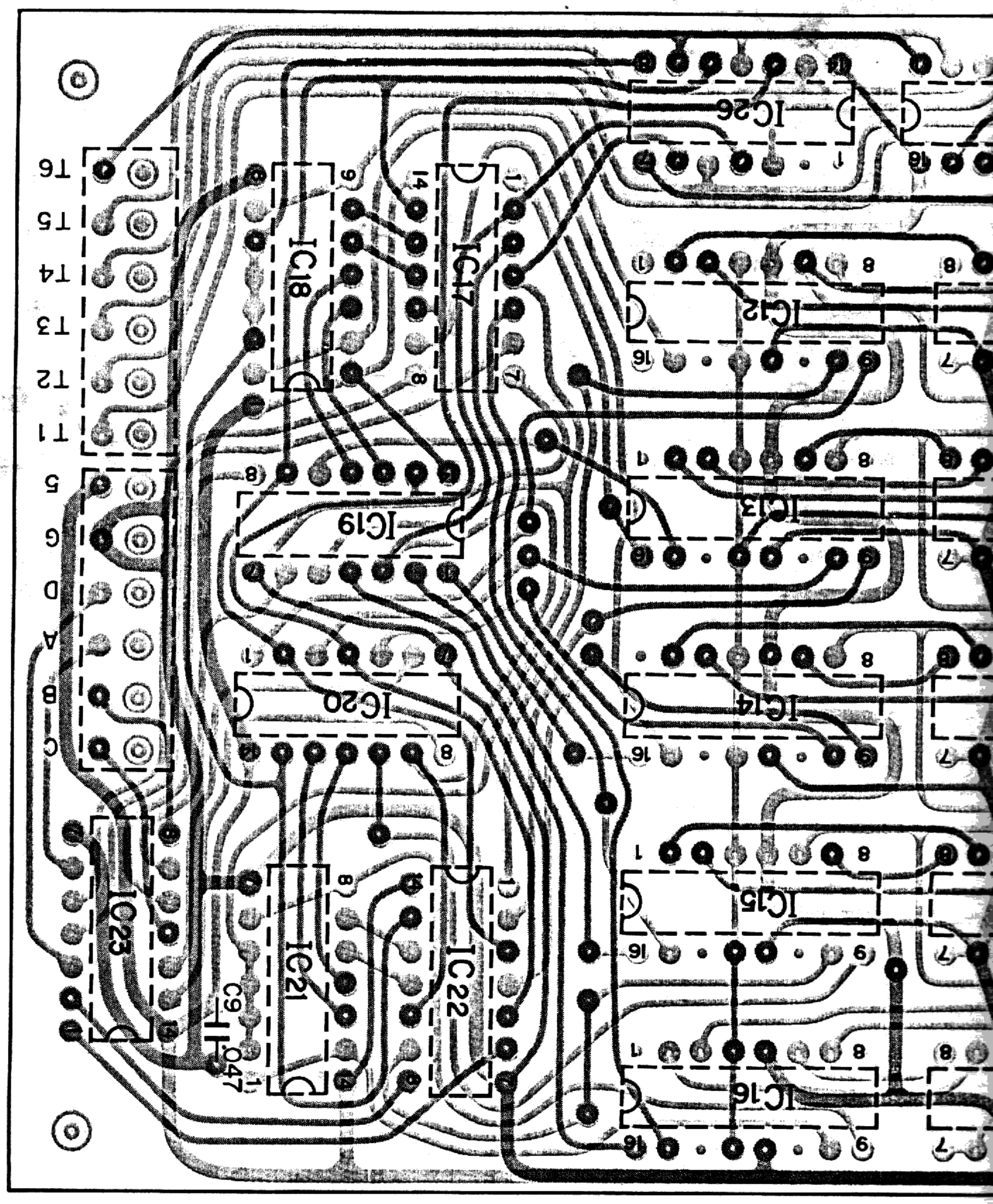


Q1,2: 2SC945(R), IC1,2,7～11,24: TD3490BP, IC3: TD3472AP, IC4,23: TD346
IC12～16: TD3475AP, IC17,19,20,22: TD3450AP, IC18,21: TD3460AP, IC25: T

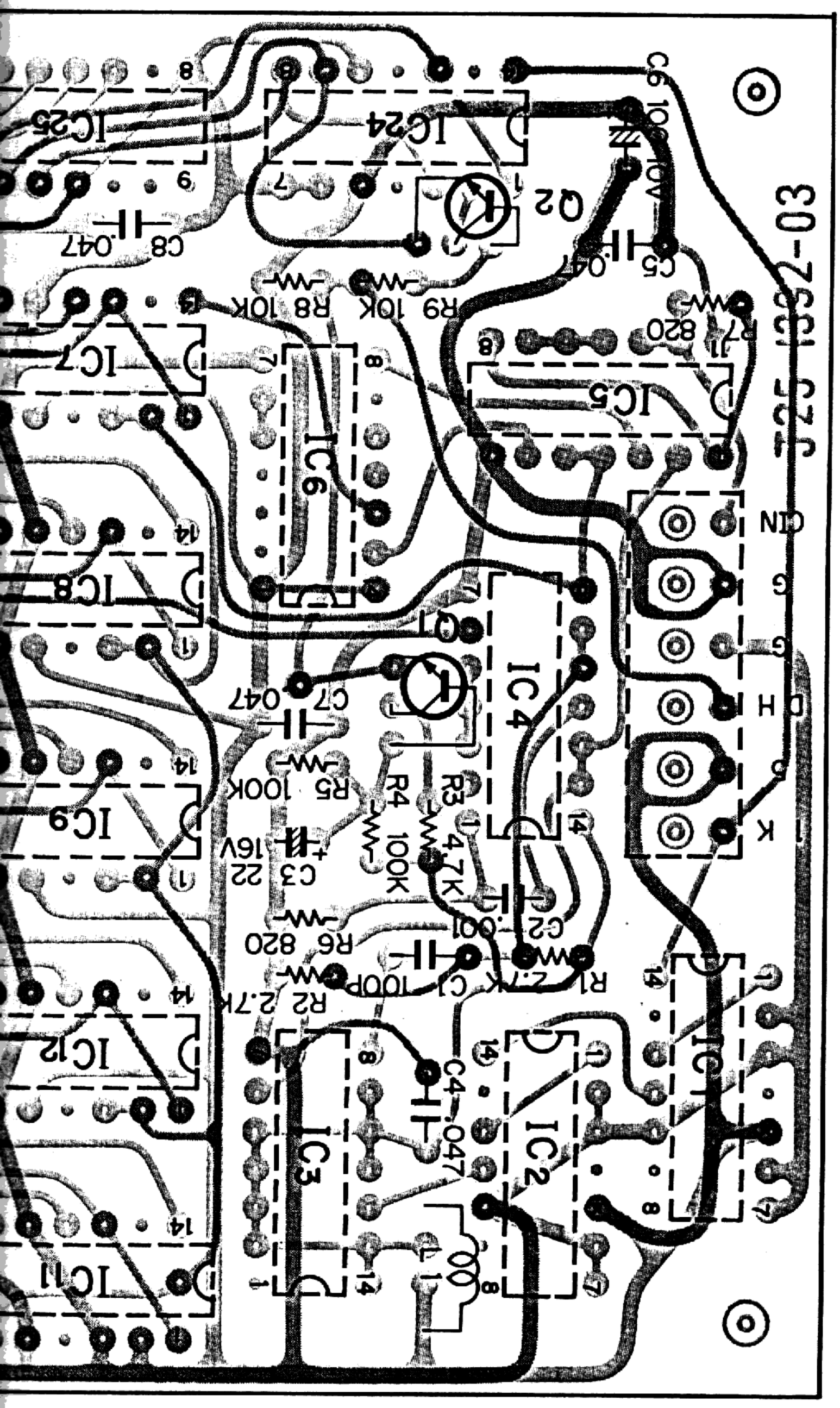


00AP, IC5: SN74H00N, IC6: SN74176N
D3442AP, IC26: TD-3404AP

DG-1

# YG-88C/DS-1A

## YG-88C SPECIFICATIONS

**CENTER FREQUENCY:**
8830.7 kHz

**PASS BAND WIDTH:**
Better than ±250 Hz (−6 dB)

**ATTENUATION BAND WIDTH:**
Less than ±900 Hz (−60 dB)

**GUARANTEED ATTENUATION:**
Better than 80 dB

## YG-88C

| Ref. No. | Parts No. | Description | Re-marks |
|---|---|---|---|
| | | **MISCELLANEOUS** | |
| — | B42-0664-04 | Label | |
| — | B50-1556-00 | Operating manual | |
| — | L71-0024-05 | Crystal filter | |
| — | H01-0585-05 | Packing case (Inside) | |
| — | H03-0200-04 | Packing case (Outside) | |

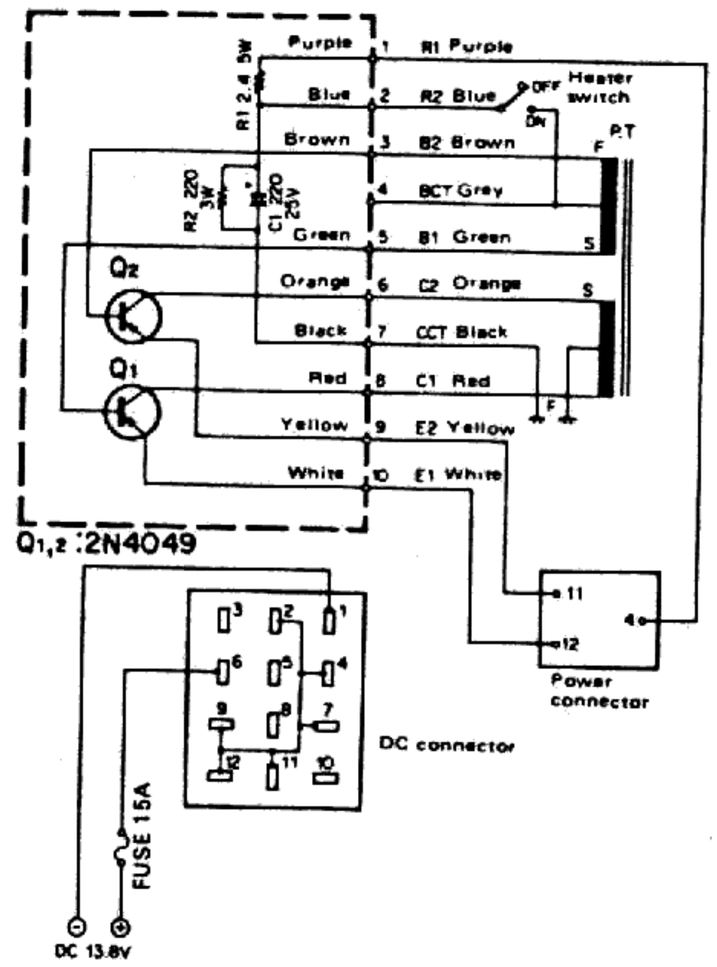


## DS-1A SPECIFICATIONS

**SEMICONDUCTORS**
T20A6 (2)

**RATED FINAL STAGE INPUT ***
More than 90W at CW (1.8 ~ 28 MHz), DC13.8V

**POWER CONSUMPTION ***
15A (CW transmission)
0.6A (heater switch OFF in signal receive mode)
5A (heater switch ON in no-signal receive mode)
Note: AT DC13.8V

**POWER SUPPLY**
DC12-16V (standard: 13.8V)

**DIMENSIONS**
80 (W) × 51 (H) × 94 (D) mm

**WEIGHT**
300g

*TS-820 is used.

## DC-DC CONVERTER (X46-1000-00)

| Ref. No. | Parts No. | Description | Re-marks |
|---|---|---|---|
| | | **CAPACITOR** | |
| C1 | CE02W1E221 | Electrolytic 220μF 25WV | |
| | | **RESISTOR** | |
| R1 | R92-0121-05 | Resistor (Cement) 2.4Ω 5W | |
| R2 | R92-0120-05 | Resistor (Cement) 220Ω 2W | |
| | | **SEMICONDUCTOR** | |
| Q1.2 | V11-0292-05 | Transistor 2N4049 | |
| | | **MISCELLANEOUS** | |
| — | E20-0513-05 | 5P terminal × 2 | |
| — | F01-0170-14 | Heat sink (A) | |
| — | F01-0171-04 | Heat sink (B) | |
| — | F11-0195-14 | Cover (Heat radiating) | |

## DS-1A

| Ref. No. | Parts No. | Description | Re-marks |
|---|---|---|---|
| — | B50-1567-00 | Operating manual | |
| — | E08-1207-05 | 12P Plug | |
| — | E33-0074-00 | Wire kit | |
| — | F05-1531-05 | Fuse 15A | |
| — | H01-1617-03 | Case (Inside) | |
| — | H03-0544-04 | Case (Outside) | |
| — | H10-1001-03 | Cushion | |
| — | H25-0029-04 | Polyethylene bag (Small) | |
| — | H25-0103-04 | Protection bag | |
| — | H25-0105-04 | Protection bag | |
| — | J13-0037-05 | Fuse holder | |
| — | J41-0024-15 | Cord bushing | |
| — | J61-0014-05 | Free up bolt | |
| — | X46-1000-00 | DC-DC converter | |

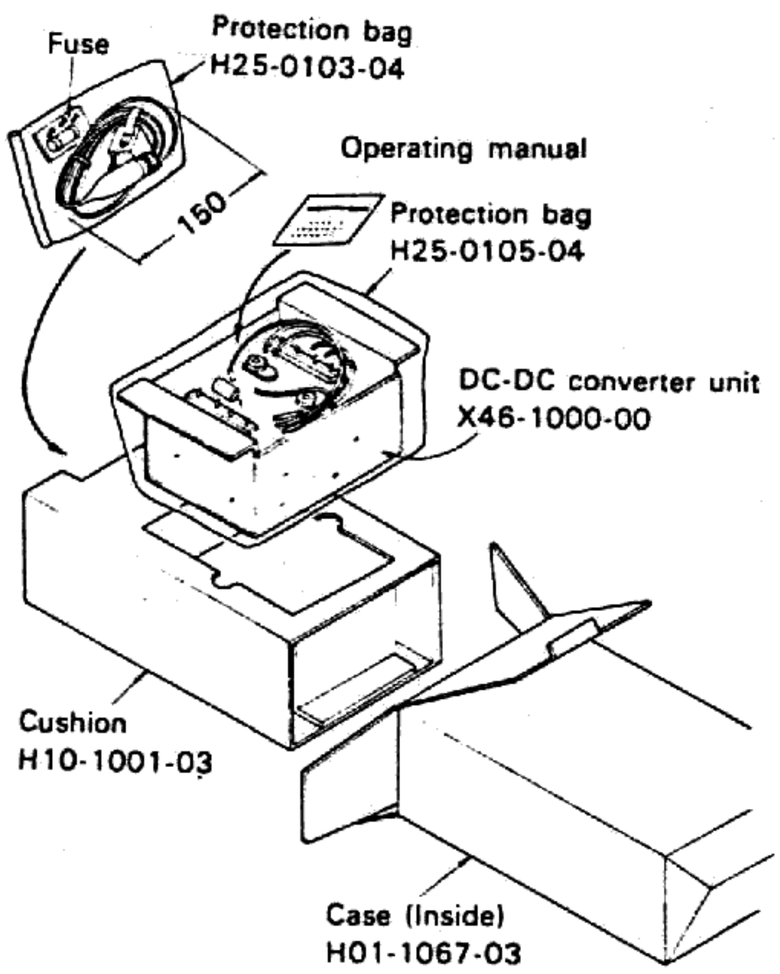

TRIO-KENWOOD COMMUNICATIONS, INC.

■ 1111, WEST WALNUT STREET COMPTON CALIFORNIA 90220, U.S.A.

TRIO-KENWOOD COMMUNICATIONS, GmbH

■ D-6374 STEINBACH-TS INDUSTRIESTRASSE, 8A WEST GERMANY.

TRIO-KENWOOD CORPORATION

■ 6-17, 3-CHOME, AOBADAI, MEGURO-KU, TOKYO, JAPAN.